Agilent

Agilent 7693A Automatic Liquid Sampler

Installation, Operation, and Maintenance

Notices

© Agilent Technologies, Inc. 2023

No part of this manual may be reproduced in any form or by any means (including electronic storage and retrieval or translation into a foreign language) without prior agreement and written consent from Agilent Technologies, Inc. as governed by United States and international copyright laws.

Manual Part Number

G4513-90010

Edition

Seventh edition, January 2023
Sixth edition, June 2017
Fifth edition, November 2010
Fourth edition, June 2010
Third edition, July 2009
Second edition, May 2009
First edition, February 2009

Printed in USA

Agilent Technologies, Inc.
2850 Centerville Road
Wilmington, DE 19808-1610 USA

安捷伦科技 （上海）有限公司
上海市浦东新区外高桥保税区
英伦路 412 号
联系电话：（800）820 3278

Warranty

The material contained in this document is provided "as is," and is subject to being changed, without notice, in future editions. Further, to the maximum extent permitted by applicable law, Agilent disclaims all warranties, either express or implied, with regard to this manual and any information contained herein, including but not limited to the implied warranties of merchantability and fitness for a particular purpose. Agilent shall not be liable for errors or for incidental or consequential damages in connection with the furnishing, use, or performance of this document or of any information contained herein. Should Agilent and the user have a separate written agreement with warranty terms covering the material in this document that conflict with these terms, the warranty terms in the separate agreement shall control.

Safety Notices

CAUTION

A CAUTION notice denotes a hazard. It calls attention to an operating procedure, practice, or the like that, if not correctly performed or adhered to, could result in damage to the product or loss of important data. Do not proceed beyond a CAUTION notice until the indicated conditions are fully understood and met.

WARNING

A WARNING notice denotes a hazard. It calls attention to an operating procedure, practice, or the like that, if not correctly performed or adhered to, could result in personal injury or death. Do not proceed beyond a WARNING notice until the indicated conditions are fully understood and met.

Contents

Part 1: Safety and Regulatory Information

1 Safety and Regulatory Information

Important Safety Warnings **14**

- Many internal parts of the instrument carry dangerous voltages **14**
- Electrostatic discharge is a threat to instrument electronics **14**
- Precautions when using CS_2 as a sample solvent **14**

Safety and Regulatory Certifications **16**

- EMC Declaration for South Korea **16**
- Information **17**
- Symbols **17**
- Technical and environmental specifications **17**
- CE Compliance **18**
- UK Compliance **18**
- Electromagnetic compatibility **19**
- Sound Emission Certification for Federal Republic of Germany **19**
- Fuses and battery **19**

Cleaning **20**

Recycling the Product **20**

Part 2: Installation

2 Compatibility

Hardware **24**

Firmware **25**

G4513A Injector **25**

G4514A Sample Tray **25**

G4515A Bar Code Reader/Mixer/Heater **26**

G4520A Sample Tray with Installed Bar Code Reader/Mixer/Heater **26**

G4522A Heating and Cooling Plate 26
G7390A Intuvo 9000 GC Tray Support Assembly Kit 27
G4526A Upgrade Kit for 6890 Series GCs 28
Sample Prep Installation 28

3 Installation

Preparing the GC 30
Preparing the GC Inlet Area 31
Prepare the 8890 and 8860 GC 31
Prepare the Intuvo 9000 GC 32
Prepare the 7890 Series, 7820, and 7820 MSD GCs 37
Prepare the 6890 Series GCs 38
Installing the G4514A Sample Tray 41
Install the G4514A Sample Tray on the 8890 GC, 8860 GC, 7890 GC, 7820 GC and 7820 MSD 41
Install the G4514A Sample Tray on the Intuvo 9000 GC 48
Installing the G4513A Injector 51
Install the injector 51
Check your work 60
Choosing the Turret Type 61
Connecting the Cables 62
8890 GC 62
8860 GC 63
Intuvo 9000 GC 64
7890 Series GC 64
7820A GC 65
6890N or 6890 Plus GC 65
6890A GC 66
6850 Series GC 66
7820 MSD 67
5975T LTM-GC/MSD 67
Test the connections 68
Parking the Sample Tray 69
Installing the Vial Racks 70
Install the vial rack labels 70
Install the vial racks 71
Remove the vial rack labels 73
Updating the Firmware 74

View the current firmware version 74
Update the firmware 75
6890A and 6890 Plus GCs 75
Configuring the GC and Data System 76
Configure the GC 76
Configure the data system 76
Calibrating the ALS System 77
Making a Trial Run 80
4 Accessories
Installing the G4526A/G4517A ALS Controller (6890A GCs) 84
Controller site requirements 84
Verify the power configuration 87
Installing the G4526A/G4516A ALS Interface Controller (6890 Plus GCs) 88
Installing the G4515A Bar Code Reader/Mixer/Heater 91
Remove the sample tray from the GC 91
Install the G4515A Bar Code Reader/Mixer/Heater 92
Installing the G4522A Heating and Cooling Plate 99
Tools needed 99
Remove the sample tray from the GC 99
Install the heating and cooling plate 100
Reassemble the sample tray 106
Install the drainage tubing 107
Complete the installation 108
Coolant 108
Water bath and pump specifications 108
Part 3: Operation
5 Introduction to Operation
About your 7693A Automatic Liquid Sampler 114
Components 114
Features 115
Capabilities 116
Fast Injection 118
Sample Carryover 120
Solvent wash 120

Sample wash 120
Sample pump 120
Number and type of washes 120
Methods and Sequences 122
The Sampler Cycle 123
6 ALS Configuration
Configuring the ALS on an 8890, 9000, or 8860 GC 126
Configuring the Injector on Other Agilent GCs 129
7890 Series GC, 7820A GC, and 7820 MSD 129
6890 Series GC 130
6850 Series GC 131
5975T LTM-GC/MSD 132
Configuring the Sample Tray on Other Agilent GCs 133
7890 Series GC, 7820 GC, and 7820 MSD 133
6890 Series GC 134
7 ALS Parameters
Setting the Injector Parameters 138
8890, 8860, and Intuvo 9000 GCs 138
7890 Series GC, 7820A GC, and 7820 MSD 141
6890 Series GC 143
6850 Series GC 144
5975T LTM-GC/MSD 144
Setting the Sample Tray Parameters 145
8890, 8860, and Intuvo 9000 GCs 145
7890 Series GC, 7820 GC, and 7820 MSD 145
6890 Series GC 146
8 Syringes and Needles
Selecting a Syringe 150
Inspecting a Syringe 152
Installing a Syringe 153
Removing a Syringe 156
Replacing a Syringe Needle 157
9 Vials and Bottles
Preparing a Sample Vial 160

Select a sample vial 160
Select a vial septa 160
Label a sample vial 161
Fill a sample vial 162
Cap a sample vial using an electronic crimper 163
Cap a sample vial using a manual crimper 163
Vial crimping visual checks 165
Setting the Sampling Depth in the Method 167
Preparing Solvent and Waste Bottles 168
Select the bottles 168
Fill the solvent bottles 168
Prepare the waste bottles 169
Placing Vials and Bottles in the Turret 170
With a sample tray 171
Without a sample tray 171
Using Two Injectors (8890, 7890 and 6890 Series GCs Only) 172
With a sample tray 172
Without a sample tray 172
How Many Sample Vials Can I Run? 173
Solvent bottle equation (injector) 173
Waste bottle equation 174
Example 174
Reduced solvent and sample usage 176
Sandwich Injections 178
Example 2-layer sandwich injection 178
Example 3-layer sandwich injection 179
10 Running Samples
Running a Sample 184
Injection volume 184
Using the ALS Controller 185
Interrupting a Run or Sequence 186
Sampler response to interruptions 186
Restarting an interrupted sequence 186
Running a Priority Sample 187
7890 and 6890 Series GCs 187
Other GC models 187

Part 4: Maintenance and Troubleshooting

11 Maintenance

Periodic Maintenance **192**

Tray Home and Park Positions **193**

Installing a Syringe **194**

Removing a Syringe **197**

Changing the Turret **198**

Adapting for Cool On-Column Injection **201**

Replacing the Needle Support Foot **202**

Adapting for Syringes Over 100 µL **203**

Replacing the Syringe Carriage Assembly **204**

Replacing a Syringe Needle **209**

Aligning the Injector **211**

Aligning the Sample Tray **213**

Calibrating the ALS System **214**

Replacing Power Fuses in the G4517A ALS Controller **217**

12 Faults and Errors

Faults **220**

- Injector faults **220**
- Sample tray faults **221**

Error Messages **223**

13 Troubleshooting

Symptom: Variability **228**

Symptom: Contamination or Ghost Peaks **230**

Symptom: Smaller or Larger Peaks Than Expected **231**

Symptom: Sample Carryover **233**

Symptom: No Signal/No Peaks **234**

Correcting Syringe Problems **235**

Correcting Sample Vial Delivery Problems **236**

14 Replacement Parts

G4513A Injector **238**

G4514A Sample Tray **241**
G4517A ALS Controller (6890A GC Only) **243**
G4516A ALS Interface Board (6890 Plus GC Only) **244**

Part 1: Safety and Regulatory Information

Important Safety Warnings **14**

Safety and Regulatory Certifications **16**

Cleaning **20**

Recycling the Product **20**

This page intentionally left blank.

1 Safety and Regulatory Information

Important Safety Warnings 14

- Many internal parts of the instrument carry dangerous voltages 14
- Electrostatic discharge is a threat to instrument electronics 14
- Precautions when using CS_2 as a sample solvent 14

Safety and Regulatory Certifications 16

- Information 17
- Symbols 17
- Technical and environmental specifications 17
- CE Compliance 18
- UK Compliance 18
- Electromagnetic compatibility 19
- Sound Emission Certification for Federal Republic of Germany 19
- Fuses and battery 19

Cleaning 20

Recycling the Product 20

This chapter provides important safety and regulatory information about the Agilent 7693A Automatic Liquid Sampler (ALS) system.

Important Safety Warnings

There are several important safety notices that you should always keep in mind when using the ALS (including any injector, tray, or powered accessory).

Many internal parts of the instrument carry dangerous voltages

With the GC power switch on, potentially dangerous voltages can exist on:

- All electronics boards in the instrument
- The internal wires and cables connected to these boards

When the G4517A ALS Controller is connected to a power source, even if the power switch is off, potentially dangerous voltages exist on:

- The wiring between the instrument power cord and the AC power supply
- The AC power supply itself
- The wiring from the AC power supply to the power switch
- The wiring from the G4517A ALS Controller to any injector or sample tray

WARNING

All these parts are shielded by covers. With the covers in place, it should be difficult to accidentally make contact with dangerous voltages. Unless specifically instructed to, never remove a cover.

WARNING

If the power cord or wiring from the instrument to the gas chromatograph insulation is frayed or worn, the cord must be replaced. Contact your Agilent service representative.

Electrostatic discharge is a threat to instrument electronics

The printed circuit (PC) boards in the instrument can be damaged by electrostatic discharge. Do not touch any of the boards unless it is absolutely necessary. If you must handle them, wear a grounded wrist strap and take other antistatic precautions. Wear a grounded wrist strap any time you must remove the electronics cover.

Precautions when using CS_2 as a sample solvent

CS_2 is a commonly-used solvent in GC applications. CS_2 has very low boiling point (46.2°C) and ignition point (100°C), and can easily be volatile and ignite if given sufficient energy. If using CS_2 in the analysis:

- Be sure to put waste bottles in all locations at all times, regardless of the waste vial positions being used. This step protects against accidental discharge of solvent into the turret body.
- Be sure to promptly empty all waste vials to avoid overfilling. Make sure no CS_2 residue remains on the turret on inlet.

- Use diffusion caps on all solvent and waste vials.
- If using a bar code reader with Mixer/Heater, disable the heater in all methods that use CS_2.
- If using removable needle syringes, be sure the needle is fully tightened before usage.
- The G4513A firmware must be A.10.10 or newer.

Safety and Regulatory Certifications

The ALS conforms to the following safety standards:

- International Electrotechnical Commission (IEC): 61010–1
- EuroNorm (EN): 61010–1

The instrument conforms to the following regulations on Electromagnetic Compatibility (EMC) and Radio Frequency Interference (RFI):

- CISPR 11/EN 55011: Group 1, Class A
- IEC/EN 61326-1

- AUS/NZ

This ISM device complies with Canadian ICES-001. Cet appareil ISM est conforme a la norme NMB—001 du Canada.

The instrument is designed and manufactured under a quality system registered to ISO 9001.

Instructions for Disposal of Waste Equipment by Users in the European Union. This symbol on the product or its packaging indicates that this product must not be disposed of with other waste. Instead, it is your responsibility to dispose of your waste equipment by handing it over to a designated collection point for the recycling of waste electrical and electronic equipment. The separate collection and recycling of your waste equipment at the time of disposal will help conserve natural resources and ensure that it is recycled in a manner that protects human health and the environment. For more information about where you can drop off your waste equipment for recycling, please contact your local city recycling office or the dealer from whom you originally purchased the product.

EMC Declaration for South Korea

사용자안내문

이 기기는 업무용 환경에서 사용할 목적으로 적합성평가를 받은 기기로서
가정용 환경에서 사용하는 경우 전파간섭의 우려가 있습니다 .
※ 사용자 안내문은 “ 업무용 방송통신기자재 ” 에만 적용한다 .

This equipment has been evaluated for its suitability for use in a commercial environment. When used in a domestic environment, there is a risk of radio interference.

Information

The Agilent Technologies ALS meets the following IEC (International Electrotechnical Commission) classifications: Safety Class I, Installation Category, Pollution Degree 2.

This unit has been designed and tested in accordance with recognized safety standards and is designed for use indoors. If the instrument is used in a manner not specified by the manufacturer, the protection provided by the instrument may be impaired. Whenever the safety protection of the Agilent ALS has been compromised, disconnect the unit from all power sources and secure the unit against unintended operation.

Refer servicing to qualified service personnel. Substituting parts or performing any unauthorized modification to the instrument may result in a safety hazard.

Symbols

Warnings in the manual or on the instrument must be observed during all phases of operation, service, and repair of this instrument. Failure to comply with these precautions violates safety standards of design and the intended use of the instrument. Agilent Technologies assumes no liability for the customer's failure to comply with these requirements.

See accompanying instructions for more information.

or

Indicates a hot surface.

Indicates hazardous voltages.

Indicates earth (ground) terminal.

Indicates explosion hazard.

Indicates electrostatic discharge hazard.

Technical and environmental specifications

- Indoor use only in ordinary atmospheres
- Altitude up to 4300 m
- Operating ambient temperatures between 5 degrees centigrade and 55 degrees centigrade

- Maximum relative humidity of 80 % for temperatures up to 31 degrees centigrade decreasing linearly to 50 % relative humidity at 40 degrees centigrade
- Pollution degree 2, Installation Cat II

In addition to the above technical and environmental specifications, the G4517A ALS Controller conforms to the following technical and environmental specifications:

- Rated for mains connection to 100–120 VAC or 220–240 VAC, 50/60 Hz, 180 VA
- Main supply voltage fluctuations up to ±10% of the nominal voltage

CE Compliance

Your Agilent instrument has been designed to comply with the requirements of the applicable directives of the European Union, such as Electromagnetic Compatibility (EMC) Directive, Low Voltage Directive (LVD), Machinery Directive (MD), RoHS Directive, etc. Agilent has confirmed that each product complies with the relevant Directives by testing samples against the harmonized EN (European Norm) standards published on the Official Journal of the European Union (OJEU).

Proof that a product complies with these directives is indicated by:

- The CE Marking appearing on the rear of the product, and
- The documentation package that accompanies the product containing a copy of the Declaration of Conformity. The Declaration of Conformity is the legal declaration by Agilent that the product complies with the relevant directives listed above, and it shows the EN standards to which the product was tested to demonstrate compliance.

UK Compliance

Your Agilent instrument has been designed to comply with the requirements of the applicable regulations of the United Kingdom, such as The Electromagnetic Compatibility Regulations 2016, The Electrical Equipment (Safety) Regulations 2016, The Supply of Machinery (Safety) Regulations 2008, The Restriction of the Use of Certain Hazardous Substances in Electrical and Electronic Equipment Regulations 2012, etc.

Agilent has confirmed that each product complies with the relevant Regulations by testing samples against the designated standards published on GOV.UK.

Proof that a product complies with these regulations is indicated by:

- The UK CA Marking appearing on the rear of the product, and
- The documentation package that accompanies the product containing a copy of the Declaration of Conformity. The Declaration of Conformity is the legal declaration by Agilent that the product complies with the relevant regulations listed above, and shows the designated standards to which the product was tested to demonstrate compliance.

Electromagnetic compatibility

This device complies with the requirements of CISPR 11 and IEC 61326-1. Operation is subject to the following two conditions:

1 This device may not cause harmful radio frequency interference.

2 This device must accept any radio frequency interference received, including interference that may cause undesired operation.

If this equipment does cause harmful interference to radio or television reception, which can be determined by turning the equipment off and on, the user is encouraged to try one or more of the following measures:

1 Relocate the radio or antenna.

2 Move the device away from the radio or television.

3 Plug the device into a different electrical outlet, so that the device and the radio or television are on separate electrical circuits.

4 Make sure that all peripheral devices are also certified.

5 Make sure that appropriate cables are used to connect the device to peripheral equipment.

6 Consult your equipment dealer, Agilent Technologies, or an experienced technician for assistance.

7 Changes or modifications not expressly approved by Agilent Technologies could void the user's authority to operate the equipment.

Sound Emission Certification for Federal Republic of Germany

Sound pressure

Sound pressure Lp < 82 dB(A) according to DIN-EN 27779
(Type test).

Schalldruckpegel

Schalldruckpegel LP < 82 dB(A) nach DIN-EN 27779 (Typprufung).

Fuses and battery

Table 1 lists replaceable fuses in the G4517A ALS Controller module. Any fuses in the G4516A ALS Interface Controller Board should only be accessed by Agilent service personnel.

There are no fuses in any other 7693A ALS components.

Table 1 G4517A ALS Controller fuses

Fuse designation	Location	Fuse rating and type
2A	G4517A Power line module	2A 250V, type T (220–240 V power supply)
2A	G4517A Power line module	2A 250V, type T (100–120 V power supply)

The G4517A ALS Controller also contains a non-replaceable 3 V lithium ion battery.

Cleaning

To clean the external surfaces of the injector tower and sample tray, disconnect the power and wipe down with a damp, lint-free cloth. Refer to **"Periodic Maintenance"** on page 192 for more information.

Recycling the Product

For recycling, contact your local Agilent sales office.

Part 2: Installation

Compatibility 23

- Hardware 24
- Firmware 25
- G4513A Injector 25
- G4514A Sample Tray 25
- G4515A Bar Code Reader/Mixer/Heater 26
- G4520A Sample Tray with Installed Bar Code Reader/Mixer/Heater 26
- G4522A Heating and Cooling Plate 26
- G7390A Intuvo 9000 GC Tray Support Assembly Kit 27
- Sample Prep Installation 28

Installation 29

- Preparing the GC 30
- Preparing the GC Inlet Area 31
- Installing the G4514A Sample Tray 41
- Installing the G4513A Injector 51
- Choosing the Turret Type 61
- Connecting the Cables 62
- Parking the Sample Tray 69
- Installing the Vial Racks 70
- Updating the Firmware 74
- Configuring the GC and Data System 76
- Configuring the GC and Data System 76
- Making a Trial Run 80

Accessories 83

- Installing the G4526A/G4517A ALS Controller (6890A GCs) 84
- Installing the G4526A/G4516A ALS Interface Controller (6890 Plus GCs) 88
- Installing the G4515A Bar Code Reader/Mixer/Heater 91
- Installing the G4522A Heating and Cooling Plate 99

This page intentionally left blank.

2 Compatibility

Hardware 24

Firmware 25

G4513A Injector 25

G4514A Sample Tray 25

G4515A Bar Code Reader/Mixer/Heater 26

G4520A Sample Tray with Installed Bar Code Reader/Mixer/Heater 26

G4522A Heating and Cooling Plate 26

G7390A Intuvo 9000 GC Tray Support Assembly Kit 27

G4526A Upgrade Kit for 6890 Series GCs 28

Sample Prep Installation 28

This chapter assists you in determining whether the 7693A ALS system is suitable for your Agilent Gas Chromatograph (GC) and aids in identifying existing equipment.

Hardware

The 7693A ALS system is compatible with the following Agilent instruments:

- 8890 GC
- 8860 GC
- Intuvo 9000 GC
- 7890 Series GC
- 7820A GC
- 6890 Series GC
- 6850 Series GC
- 7820 MSD
- 5975T LTM-GC/MSD

Firmware

Agilent GCs require the minimum firmware revisions listed in **Table 2**.

To update firmware, use the Agilent GC Firmware Update utility, available from the Agilent web site (**www.agilent.com**).

Table 2 Minimum GC firmware revisions for 7693A ALS system use

Instrument	Minimum firmware version required
8890 GC	1.0.61 (sample prep functionality requires firmware 2.2 or higher)
8860 GC	1.0.61
Intuvo 9000 GC	A.01.02 (sample prep functionality requires firmware 2.2 or higher)
7890 Series GC	A.01.10
7820A GC	A.01.01
6890N GC	N.06.07
6890A GC	A.03.08 (chip set)
6890 Plus GC	A.03.08 (chip set)
6850 GC with serial number < US00003200	A.06.071
6850 GC with serial number > US10243001 (includes 6850 Network and Series II)	A.06.021
7820 MSD	A.01.01 (GC)
5975T LTM-GC/MSD	A.03.02.005 (GC) / 5.02.07 (MSD)

G4513A Injector

The G4513A Injector is designed for the Agilent 7693A ALS system. No other injector models are compatible. The injector is compatible with all GC models listed in **Table 2**.

G4514A Sample Tray

The G4514A Sample Tray is designed for the Agilent 7693A ALS system. No other sample tray models are compatible.

The G4514A Sample Tray is compatible with the following Agilent GC models:

Samples may be handled entirely with the 16-sample standalone turret or the 3-sample transfer turret supplied with the injector. The G4514A Sample Tray has a capacity of 150 samples.

Table 3 Sample tray compatibility

GC model	Supported version
8890	All
8860	All
Intuvo 9000	All
7890 Series	All
7820	All 7820 MSD GCs and standalone 7820 GCs with serial number CN15222001 or higher
6890	All

G4515A Bar Code Reader/Mixer/Heater

The G4515A Bar Code Reader/Mixer/Heater (BCR) is designed for the Agilent 7693A ALS system, and provides positive sample identification checks, plus single vial heating and mixing capabilities. No other BCRs, mixers, or heaters are compatible.

The G4515A BCR/Mixer/Heater is not compatible with the 7820A or 8860 GCs.

G4520A Sample Tray with Installed Bar Code Reader/Mixer/Heater

The G4520A Sample Tray with pre-installed BCR/Mixer/Heater is identical to the individual parts G4514A Sample Tray and G4515A BCR/Mixer/Heater. In this manual it is assumed that any reference to G4514A or G4515A also applies to the G4520A accessory.

The G4515A BCR/Mixer/Heater is not compatible with the 7820A or 8860 GCs.

G4522A Heating and Cooling Plate

The Agilent G4522A Heating and Cooling Plate is designed specifically for the G4514A Sample Tray. No other cooling accessories are compatible.

The G4522A Heating and Cooling Plate is not compatible with 6890A and 6890 Plus GCs.

G7390A Intuvo 9000 GC Tray Support Assembly Kit

The G7390A Intuvo 9000 7693A Tray Support Assembly Kit is required for an Intuvo 9000 GC with an Agilent 7693A ALS system.

Intuvo 9000 7693A Tray Support Assembly kit contents:

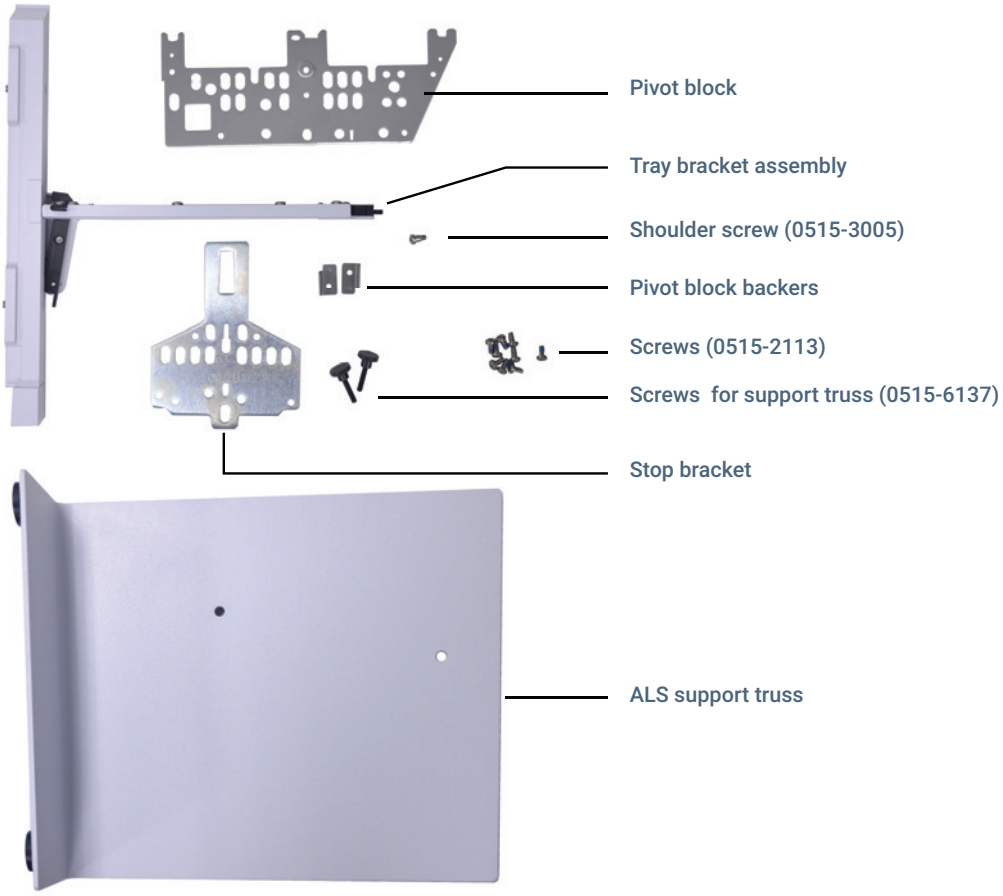

G4526A Upgrade Kit for 6890 Series GCs

The G4526A Upgrade Kit is required for any 6890 Series GC with an Agilent 7693A ALS system. The Upgrade Kit includes the following:

- G1530-40205 Inlet Fan Cover
- G1530-40070 Injection Port Top Cover (tahitian teal)
- 0515-2496 M4 × 0.7 12 mm screw (3)
- 1390-1024 M4 × 0.7 screw (1)

The following options are available depending on your 6890 GC type:

- Option 001-Required for 6890A GCs with the last five serial numbers < 20000. Includes the external G4516-64000 ALS Controller.
- Option 002-Required for 6890 Plus GCs with the last five serial numbers > 20000. Includes the G4517-64000 ALS Interface Board controller.
- Option 003-Required for all 6890N GCs. Includes the G1530-41205 Inlet Fan Cover and the G1530-40075 Injection Port Top Cover (tahitian teal) for older 6890N GC models, or the G1530-41075 Injection Port Top Cover (light gray) for newer 6890N GC models.

NOTE

If your 6890A or 6890 Plus GC does not have a LAN connection, the G2335A 6890 LAN kit is also required.

Sample Prep Installation

If the injector is being installed only for sample preparation, an available GC inlet is not required. In this case, install the sampler system as described in the manual, but the injector will not be available to make injections.

3 Installation

Preparing the GC **30**

Preparing the GC Inlet Area **31**

- Prepare the 8890 and 8860 GC **31**
- Prepare the Intuvo 9000 GC **32**
- Prepare the 7890 Series, 7820, and 7820 MSD GCs **37**
- Prepare the 6890 Series GCs **38**

Installing the G4514A Sample Tray **41**

- Install the G4514A Sample Tray on the 8890 GC, 8860 GC, 7890 GC, 7820 GC and 7820 MSD **41**
- Install the G4514A Sample Tray on the Intuvo 9000 GC **48**

Installing the G4513A Injector **51**

Choosing the Turret Type **61**

Connecting the Cables **62**

Parking the Sample Tray **69**

Installing the Vial Racks **70**

Updating the Firmware **74**

Configuring the GC and Data System **76**

Calibrating the ALS System **77**

Making a Trial Run **80**

The procedure for installing the 7693A ALS depends on the system components purchased and the type of GC involved. In all cases, you must remove any existing ALS system components before installation. Older GCs will require firmware updates. Follow the steps in this chapter that are relevant to your GC and ALS system setup.

Preparing the GC

This procedure explains how to prepare an Agilent GC for the 7693A ALS system.

WARNING

The inlet may be hot enough to cause skin burns. Allow the inlet to cool to ambient temperature before working near the inlet.

1 Set the GC inlets, detectors, and oven to room temperature.

   If installing the sampler on an 8890, 8860, or 9000 GC, put the GC into Maintenance Mode. On the GC touchscreen or browser interface, go to **Maintenance > Instrument > Perform Maintenance > Maintenance Mode > Start Maintenance**.

2 After the GC inlets, detectors, and oven have cooled, turn off the GC and unplug the power cord.

3 If installed, unplug any ALS component cables. Remove any injectors, injector inlet mounting posts, parking posts, tray brackets and supports, and sample tray from the GC.

   For details, refer to the sampler's original documentation.

Preparing the GC Inlet Area

This section explains how to prepare the 8890 GC, 8860 GC, Intuvo 9000 GC, 7890 Series GC, 7820 GC, 6890 Series GC, and the 7820 MSD inlet area for the 7693A ALS system with a tray.

If you have a 6850 Series GC or the 5975T LTM-GC/MSD, or if not installing a tray, skip to **"Installing the G4513A Injector"** on page 51.

WARNING

The inlet may be hot enough to cause skin burns. Allow the inlet to cool to ambient temperature before working near the inlet.

Prepare the 8890 and 8860 GC

The GC inlet area (injection port top cover, inlet fan cover) is designed to be fully-compatible with the 7693A ALS system, but must be prepared if installing a sample tray. If not installing a sample tray, skip this section.

Remove five of the seven screws securing the inlet cover to the GC. Do not remove the two screws in the locations shown below (8890 shown, 8860 is similar).

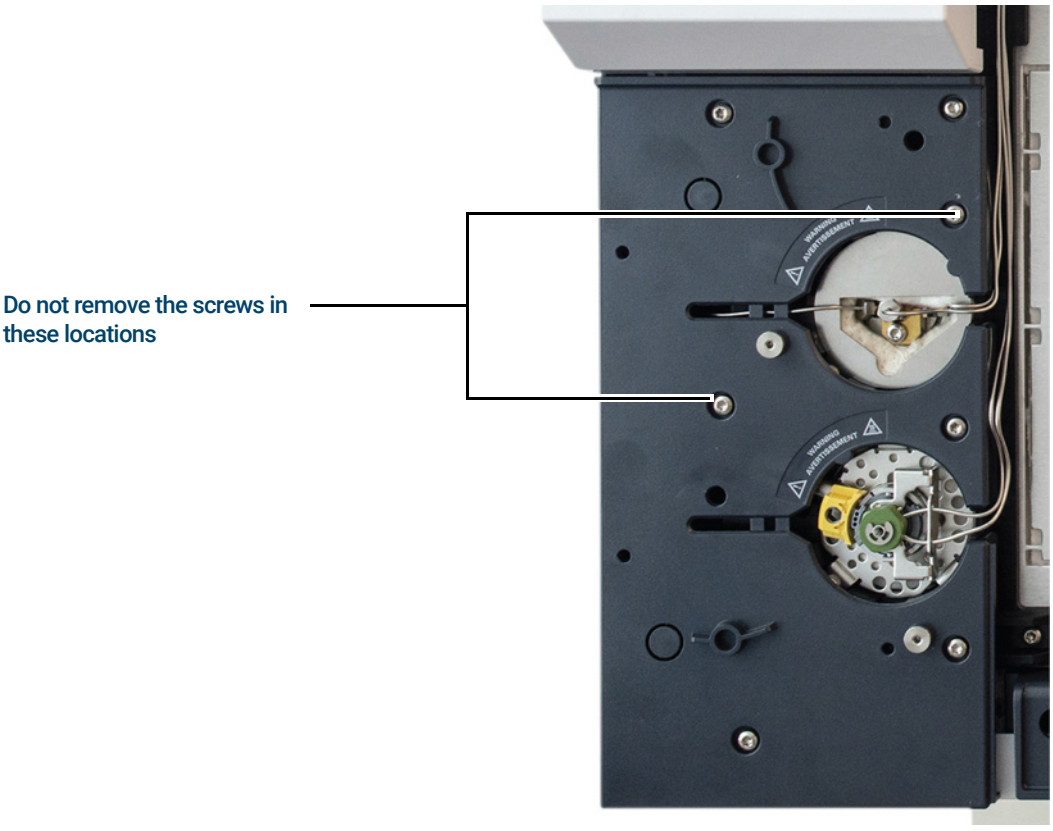

Prepare the Intuvo 9000 GC

If installing a 7693A ALS tray with an Intuvo 9000 GC, install the pivot bracket, support bracket, and support truss now. (Refer to the Intuvo 9000 7693A Tray Support Assembly, accessory G7390A).

Install the pivot block

1 Remove the GC top cover.

2 Remove the GC right side panel.

3 Remove left side panel.

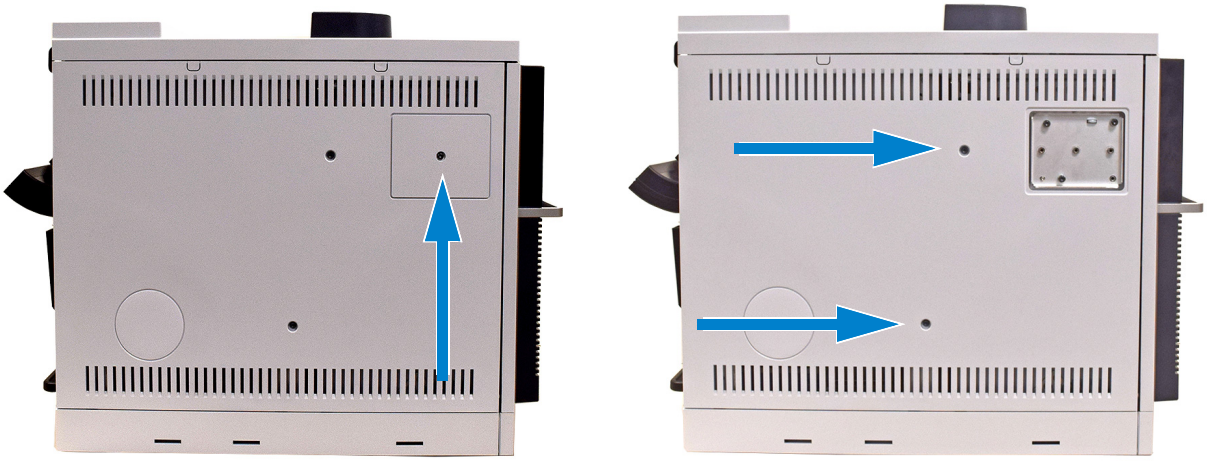

4 Install pivot block with shoulder screw (0515-3005).

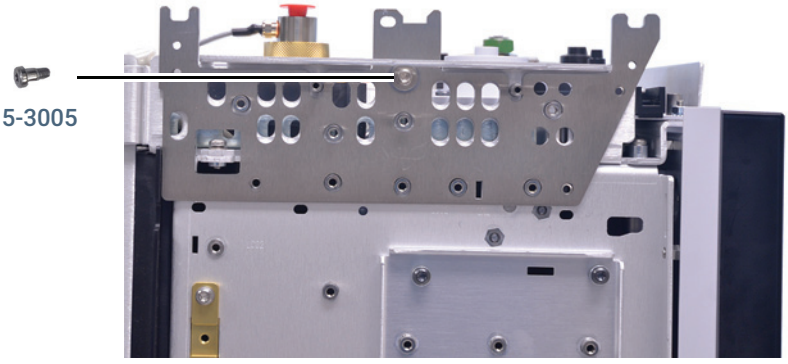

5 Install the two pivot block backers (G4580-00272) with two screws (0515-2113), then attach three screws (0515-2113) to the bottom three holes of the pivot block.

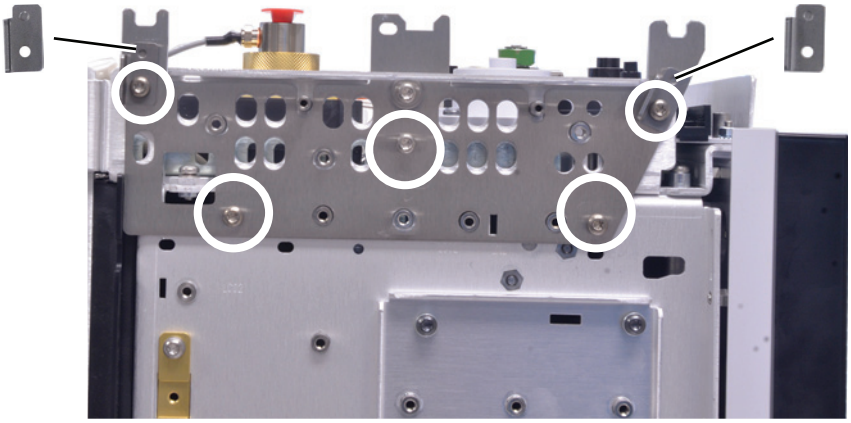

6 If **not** using a D2 or MSD, remove the two captive screws in the left-side panel. Install the left side panel onto the GC (without screws — you will install two new screws in a later step). Install the MSD frame cover.

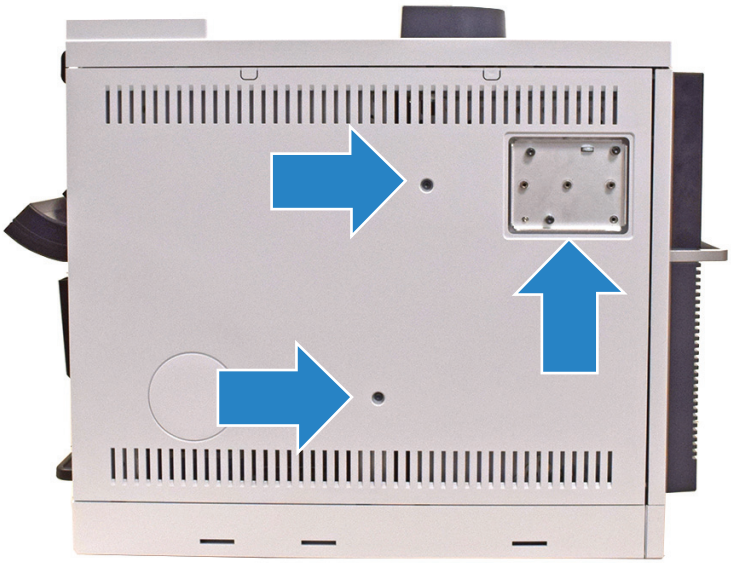

7 **If using a D2 or MSD**, install the left side panel onto the GC. (Do not install the MSD frame cover.)

8 If **not** using a D2 or MSD, install the MSD cover insert, then attach the support truss (G4580-60517) to left side of GC.

If using a D2 configuration or MSD, you will not have a support truss. Skip this step.

a Match the slots on the left side of the GC.

b Secure the support truss with two thumbscrews (0515-6137).

Install the stop bracket on the right side of the GC

1 Install the stop bracket with four screws (0515-2113). The label “ONE DEGREE TILT” should face outward.

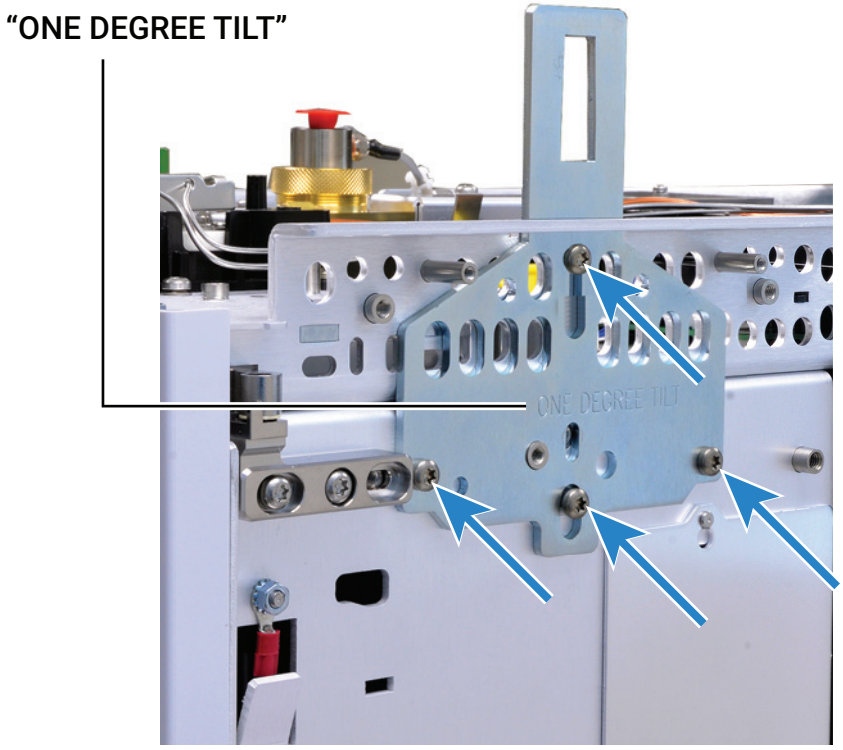

2 Install the right-side cover.

3 Reinstall the GC top cover.

Prepare the 7890 Series, 7820, and 7820 MSD GCs

The GC inlet area (injection port top cover, inlet fan cover) is designed to be fully-compatible with the 7693A ALS system, but must be prepared if installing a sample tray. If not installing a sample tray, skip this section.

This section contains instructions and photos for the 7890 Series GC. Steps for the 7820 GC and 7820 MSD are similar.

Remove five of the seven screws securing the inlet cover to the GC. Do not remove the two screws in the locations shown below.

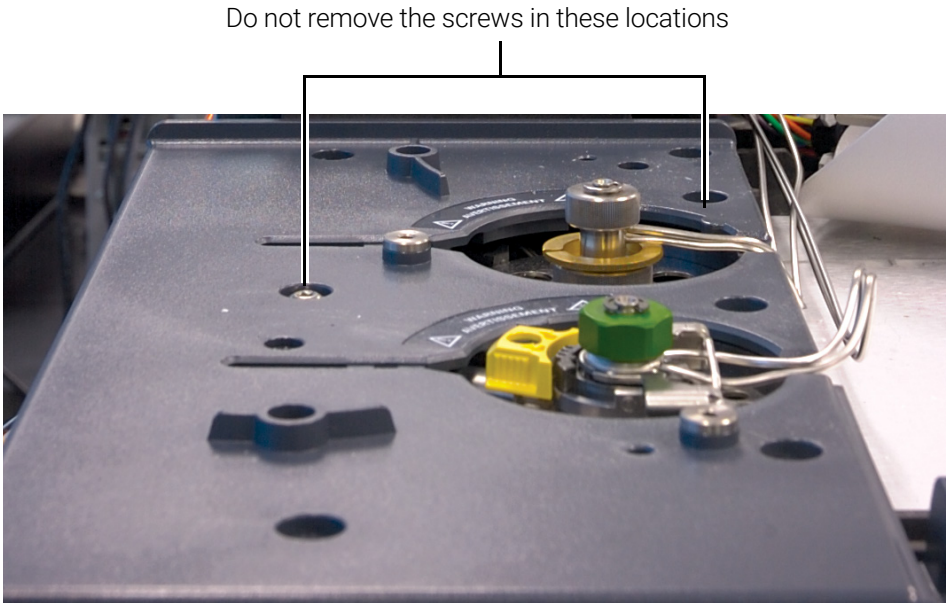

Prepare the 6890 Series GCs

All 6890 Series GCs require the replacement of the inlet fan cover before installing any component of the 7693A ALS system. Most 6890 Series GCs also require the replacement of the injection port top cover. The procedure below prepares the 6890 Series GC inlet area for the 7693A ALS system.

Replace the inlet fan cover

The inlet fan cover encloses the fan that draws air through the 6890 GC inlets.

1. Loosen the Torx T-20 screw on the right side of the fan cover. See **Figure 2** on page 39 for screw location.
2. Slide the cover slightly to the right to disengage it from the left mounting post and lift the cover up and off.
3. Lower the replacement inlet fan cover (G1530-41205) and engage it to the left mounting post.
4. Install the Torx T-20 screw on the right side of the fan cover until tight.

Replace the injection port top cover

The injection port top cover is the plastic cover mounted over the two inlets. In most cases, you will need to replace the injection port top cover before using the 7693A ALS system. However, some later-model 6890 Series GCs were manufactured with a compatible injection port top cover. If your injection port top cover has the two features noted in **Figure 1**, then you can skip this section. Otherwise follow the procedure below.

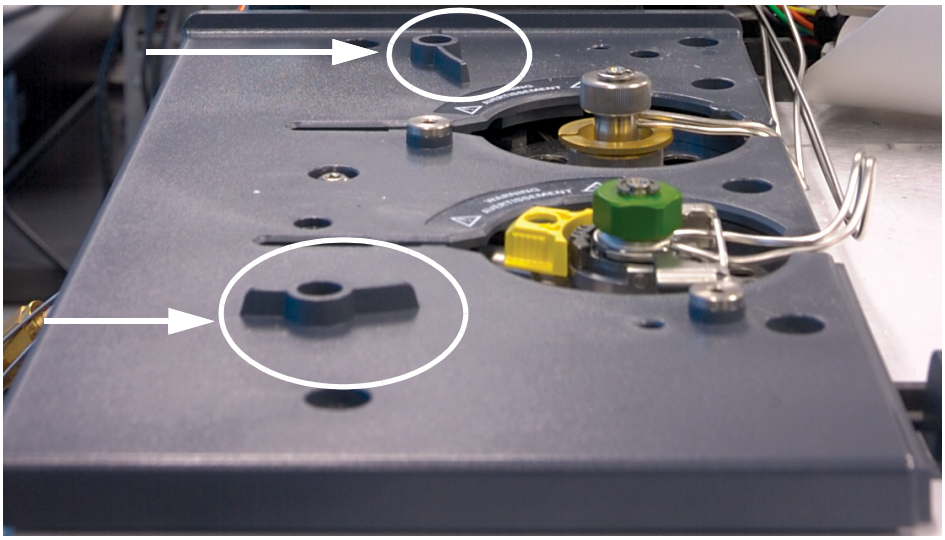

Figure 1. Compatible injection port top cover features

1 Fully loosen the six Torx T-20 screws on the top of the cover (**Figure 2**).

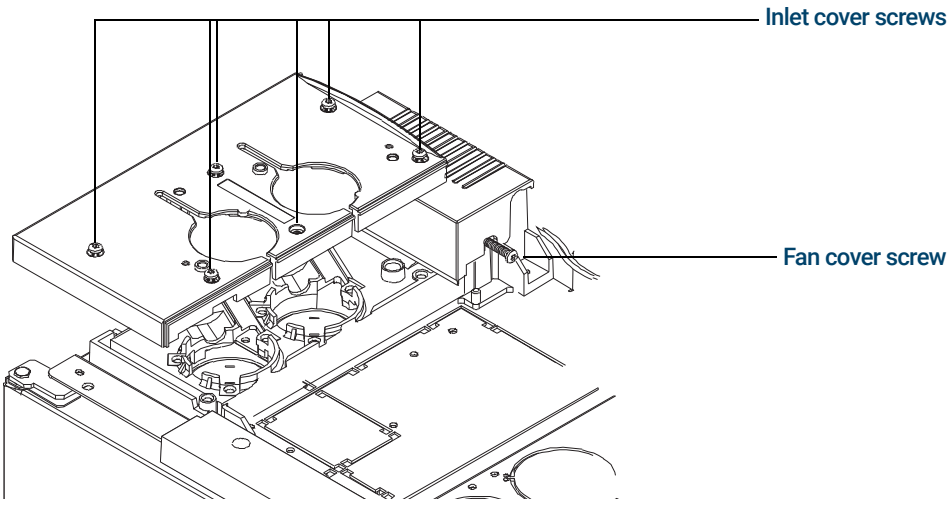

Figure 2. Removing the injection port top cover and inlet fan cover (6890 Series GC)

2 Lift off the cover.

3 Set the replacement inlet cover (G1530-41075) on the GC. Make sure all plumbing and wires are properly routed in their channels.

4 Secure the replacement injection port top cover using two screws from the original inlet cover in the hole locations (**Figure 3**).

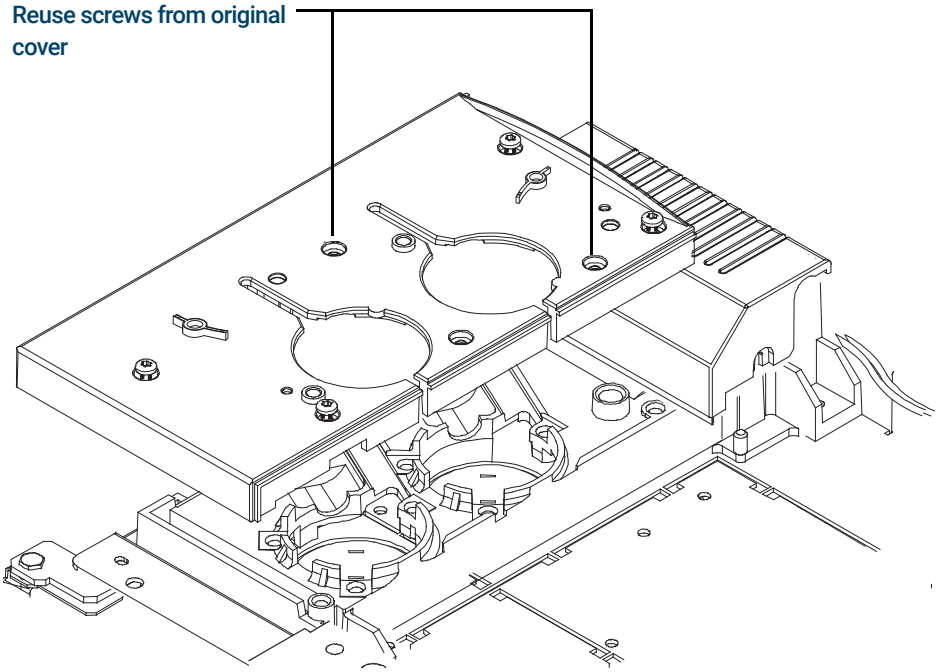

Figure 3. Replacing the injection port top cover and inlet fan cover (6890 Series GC)

5 If installing a sample tray, cover replacement is complete. Be sure to store the remaining screws in a safe location. Skip to the next section.

If not installing a sample tray, install the remaining four Torx T-20 screws on the injection port top cover.

Installing the G4514A Sample Tray

This procedure explains how to install the G4514A Sample Tray on the 8890 GC, 8860 GC, Intuvo 9000 GC, 7890 Series GC, 7820 GC, 6890 Series GC, and 7820 MSD.

If you have a 6850 Series GC, a 5975T LTM-GC/MSD, or are not planning to install a sample tray, skip this section.

If you have a 6890A GC, be sure to install the G4526A/G4517A ALS Controller before installing the G4514A Sample Tray. See **"Installing the G4526A/G4517A ALS Controller (6890A GCs)"** for more information.

If you have a 6890 Plus GC, be sure to install the G4526A/G4516A ALS Interface Controller before installing the G4514A Sample Tray. See **"Installing the G4526A/G4516A ALS Interface Controller (6890 Plus GCs)"** for more information.

Install the G4514A Sample Tray on the 8890 GC, 8860 GC, 7890 GC, 7820 GC and 7820 MSD

Install the mounting bracket

1 Attach the mounting bracket (G4514-63000) to the inlet cover.

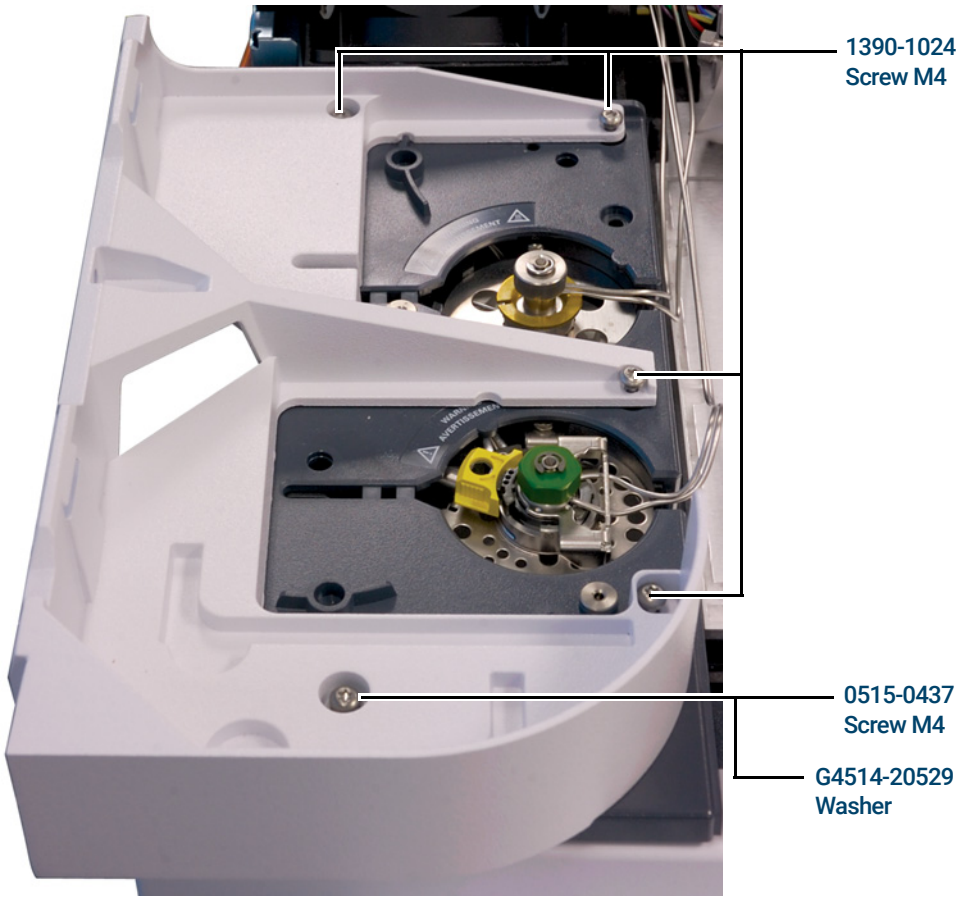

Prepare the sample tray

WARNING

Take care when holding the tray. Because the motors are heavy and located off-center, an improper balance point can cause the tray to tip out of your grasp.

1 Set the tray on a secure, flat surface. Position the tray on its side so the tray bracket faces up. Let the gantry slide all the way down.

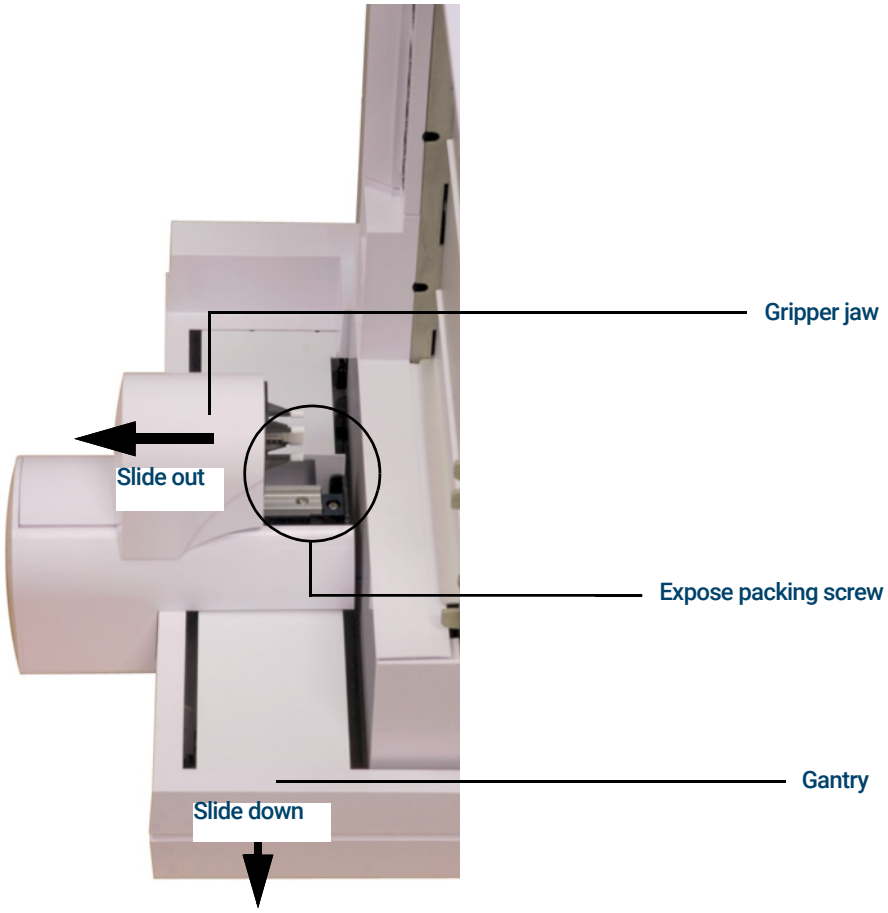

2 Slide the gripper jaw away from the tray base until the packing screw is accessible.

3 Remove the packing screw using a Phillips screw driver and tweezers.

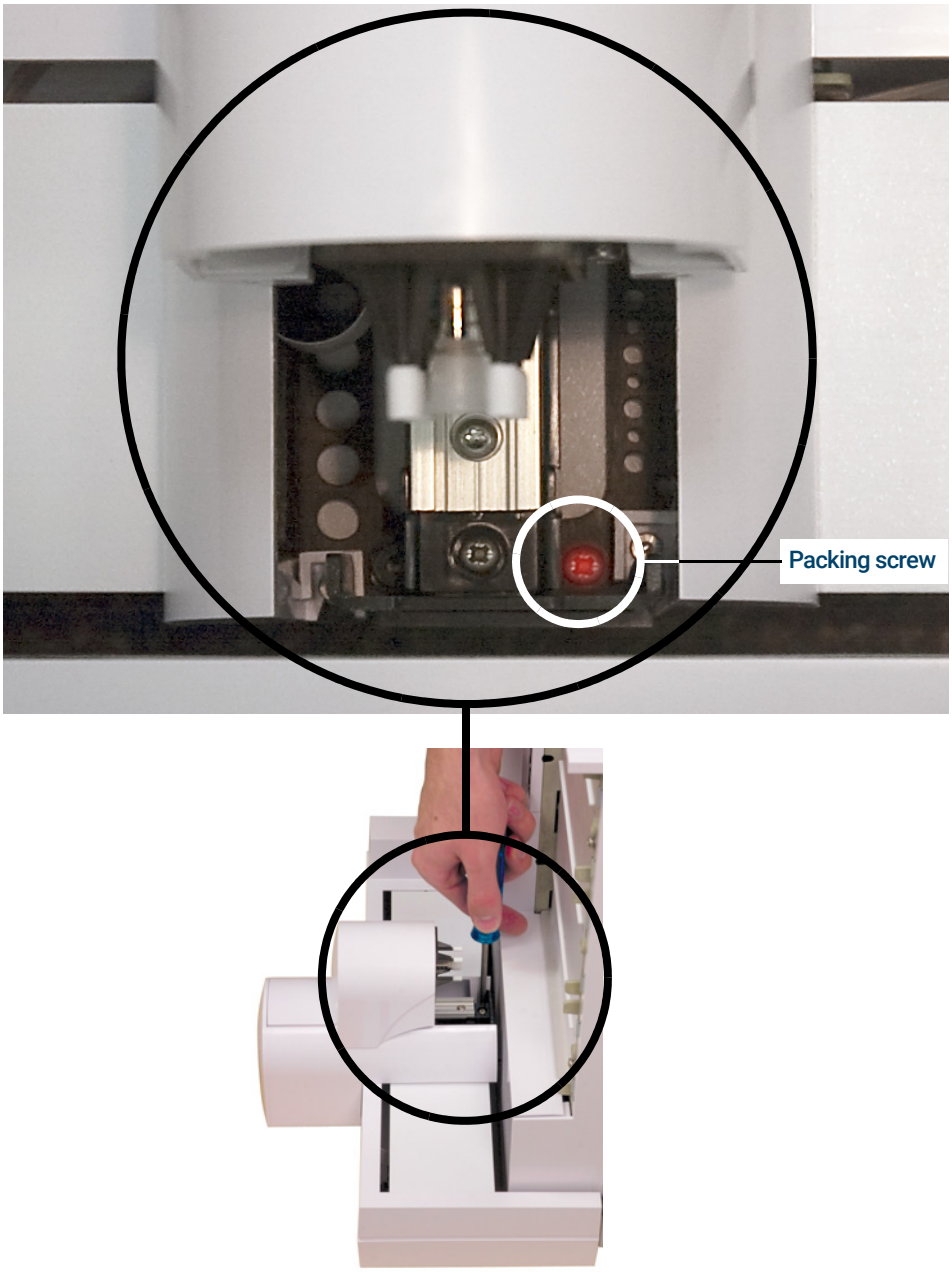

4

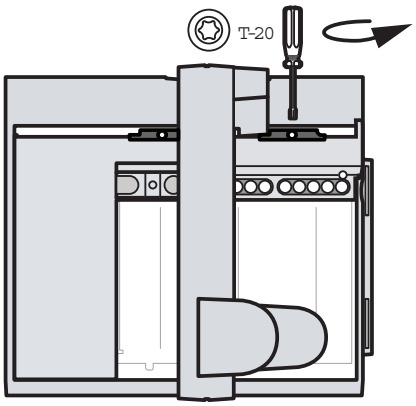

5

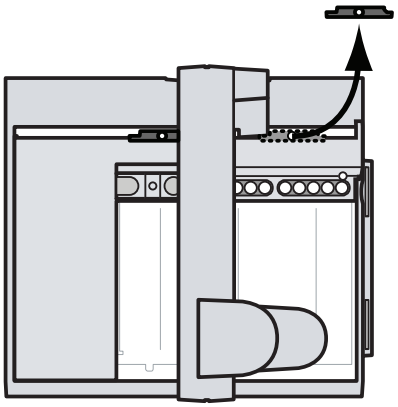

6

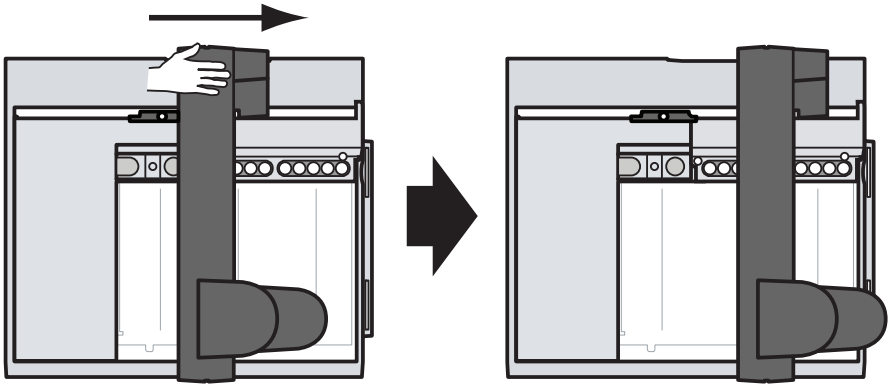

7

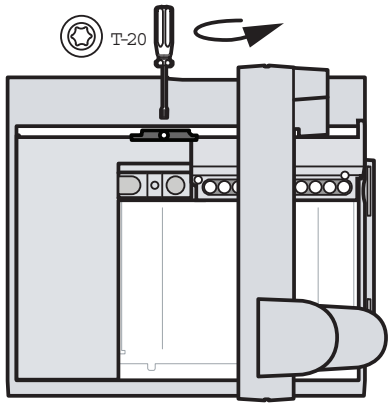

8

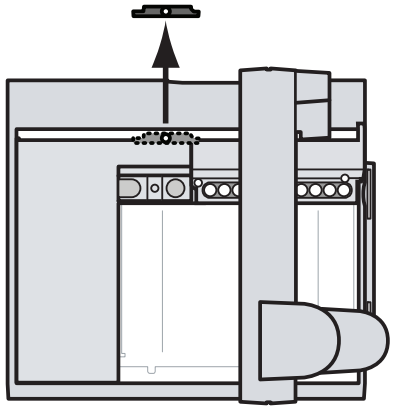

Install the sample tray

1 Using both hands, carefully hang the sample tray bracket over the mounting bracket tabs (**Figure 4**). Try to keep the gantry from sliding towards the tray bracket while performing this step.

2 Tilt the tray, line up the tray bracket with the tabs on the mounting bracket, and slowly lower into place.

Figure 4. Hanging the tray bracket over the mounting bracket tabs.

3 Once attached, make sure that the sample tray is lying flat against the mounting bracket. Each tab on the mounting bracket must be fully latched to the tray bracket (**Figure 5**).

Figure 5. Sample tray correctly installed.

Figure 6. Sample tray incorrectly installed.

4 Secure the sample tray to the mounting bracket by installing three T-30 Torx screws.

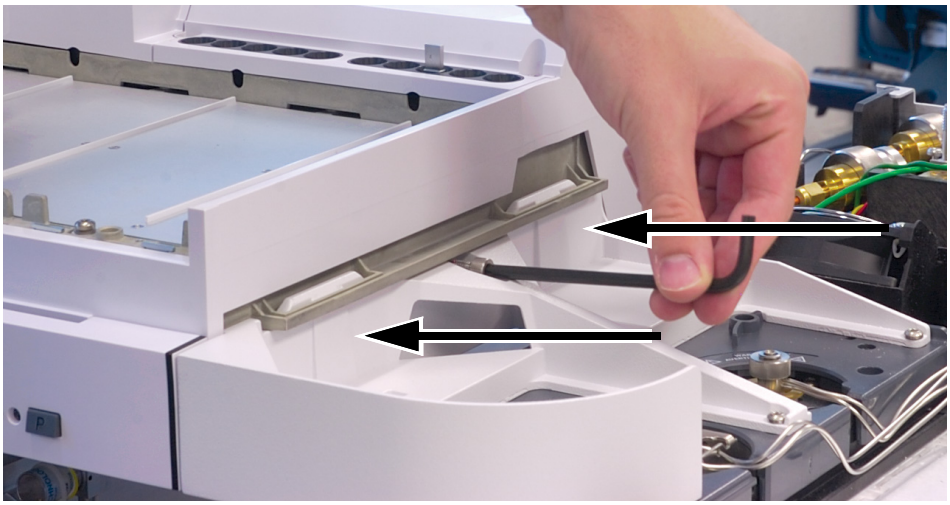

Connect the communication cable

1 Connect the communication cable to the sample tray. See **"Connecting the Cables"** on page 62 for more information.

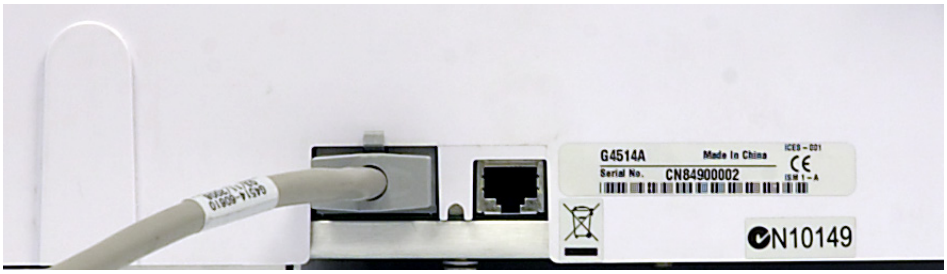

Install the G4514A Sample Tray on the Intuvo 9000 GC

If a tray is not available, skip this section.

Install tray bracket onto the tray

1 Prepare the tray. See **"Prepare the sample tray"** on page 42.

2 Park gently.

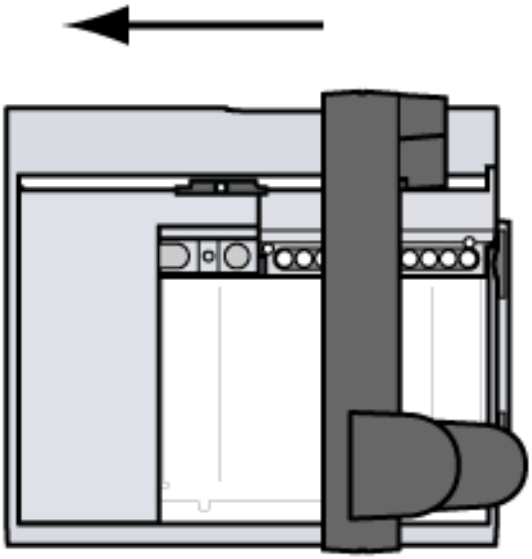

3 Place the bracket on the tray. Tighten the captive screws.

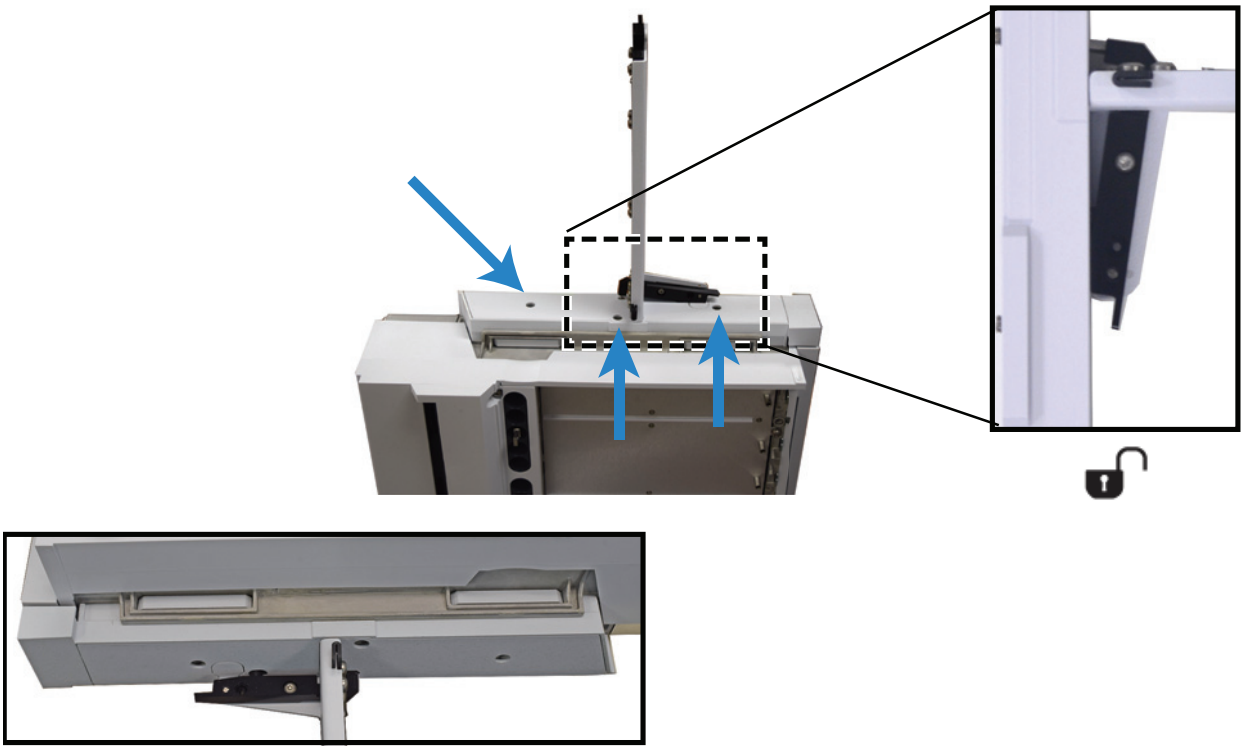

Figure 7. Assembling the tray bracket to the tray

Figure 8. Bracket and tray (assembled)

Install the tray on the GC

1 Place tray on the GC, inserting the tray bracket into the stop bracket.

2 Lock the tray in place.

3 Connect the tray to the GC (the **ALS 2** connector).

Installing the G4513A Injector

Install the injector

This procedure explains how to install the G4513A Injector.

If installing the G4514A Sample Tray with your ALS system, you must install the tray first. See **"Installing the G4514A Sample Tray"** on page 41 for more information.

If installing the G4514A Sample Tray with your ALS system on an Intuvo 9000 GC, you must first install both the support bracket and the sample tray. See **"Prepare the Intuvo 9000 GC"** on page 32 and **"Install the G4514A Sample Tray on the Intuvo 9000 GC"** on page 48 for more information.

If you have a 6890A GC, be sure to install the G4526A/G4517A ALS Controller before installing the G4513A Injector. See **"Installing the G4526A/G4517A ALS Controller (6890A GCs)"** for more information.

If you have a 6890 Plus GC, be sure to install the G4526A/G4516A ALS Interface Controller before installing the G4513A Injector. See **"Installing the G4526A/G4516A ALS Interface Controller (6890 Plus GCs)"** for more information.

1 Install the parking post(s) on the GC. If you have a 5975T LTM-GC/MSD, skip to the next step.

- **8890 and 8860 GC**

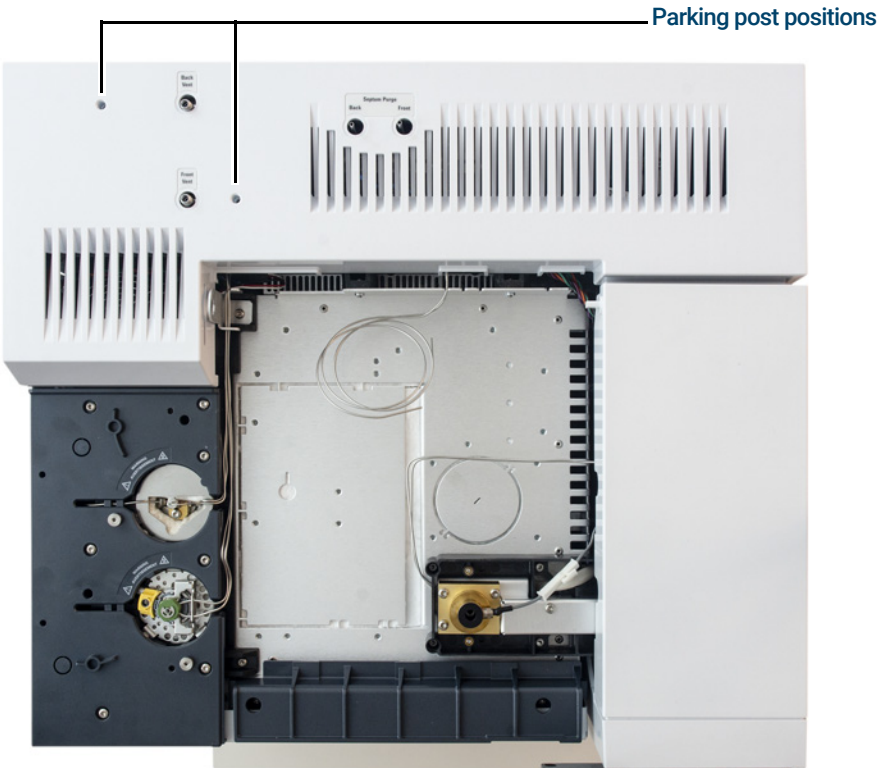

Figure 9. 8890 GC Parking post locations (8860 GC is similar)

- **Intuvo 9000 GC**

Figure 10. Intuvo 9000 GC parking post position

- **7890 and 7820 GC**

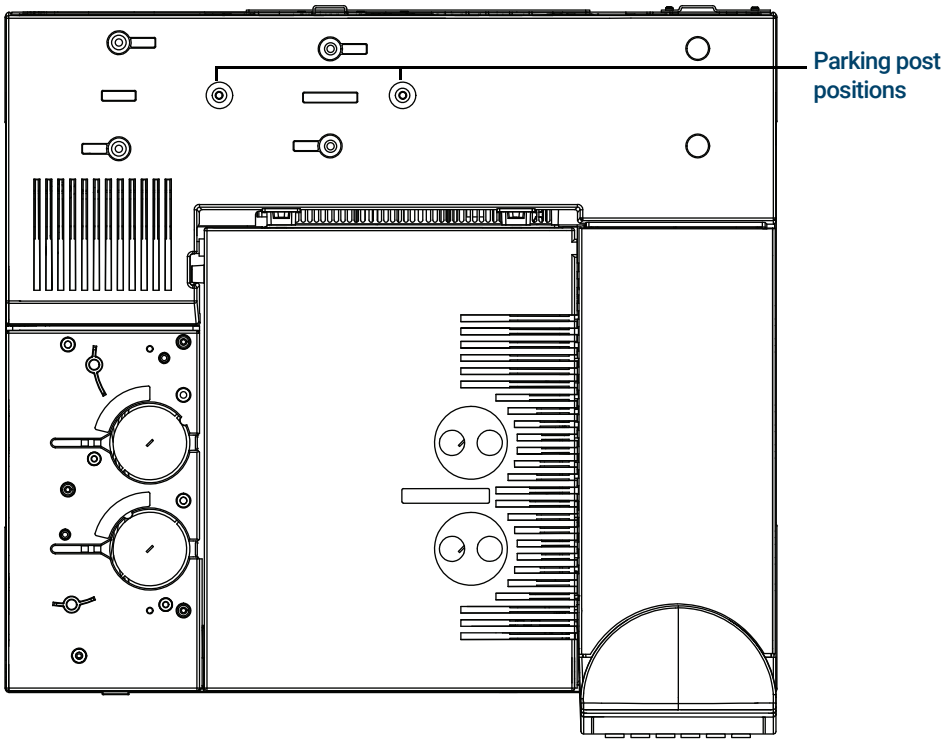

Figure 11. 7890 and 7820A parking post positions

2 Lay the injector on a flat surface, or mount the injector on a parking post.

3 Remove the shipping tape from the turret and injector tower door.

4 Open the injector door.

5 Using a T-10 Torx driver, completely loosen the T-10 screw and remove the shipping clamp from the syringe carriage (**Figure 12** and **Figure 13**).

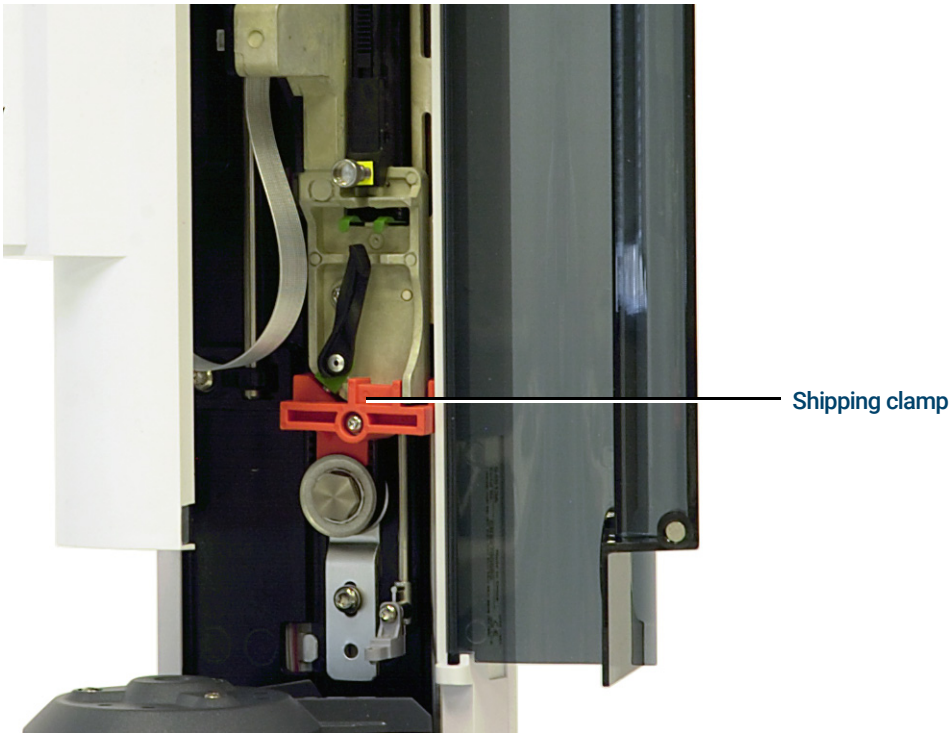

Figure 12. Shipping clamp installed.

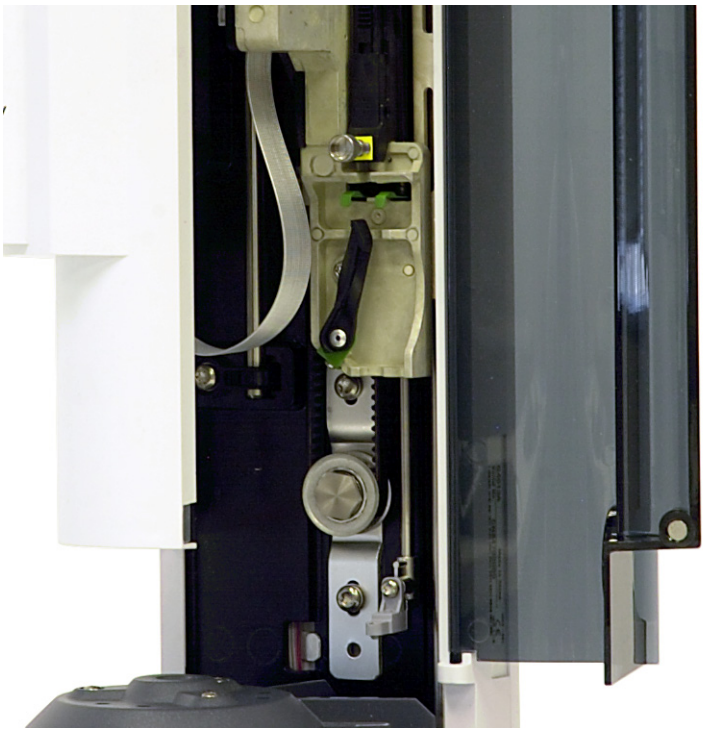

Figure 13. Shipping clamp removed.

6 Close the injector door.

CAUTION

In the following steps, use a flat blade screwdriver that snugly fits the slot in the top of the posts. An undersized blade can damage the post top and prevent the injector from mounting properly.

CAUTION

Do not mount the G4513A Injector on a mounting post for any other injector; this can damage the injector. Remove the old post and replace it with the new one.

7 Install the injector mounting post (G4513-20561, **Figure 14**) to the GC inlet cover's threaded connection. If the wrong post is used (for example the 7683B ALS mounting post) the injector will not work. The mounting post supplied in this kit only supports the G4513A Injector.

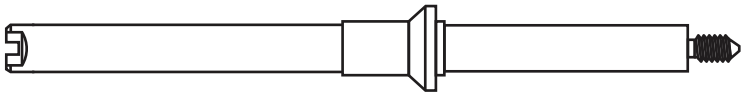

Figure 14. Mounting post (G4513-20561)

- **Intuvo 9000 GC**

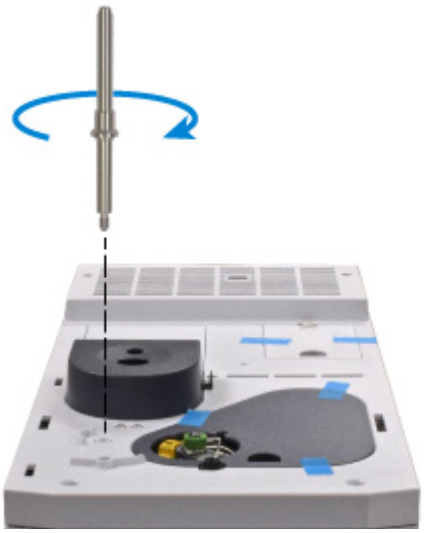

Figure 15. Intuvo 9000 GC. Install the mounting post.

- **8890 GC, 8860 GC, 7890 Series GC, 7820A GC, and 7820 MSD**. Install into the inlet cover in the front or rear location, as desired. The post must be turned all the way down (**Figure 16**).

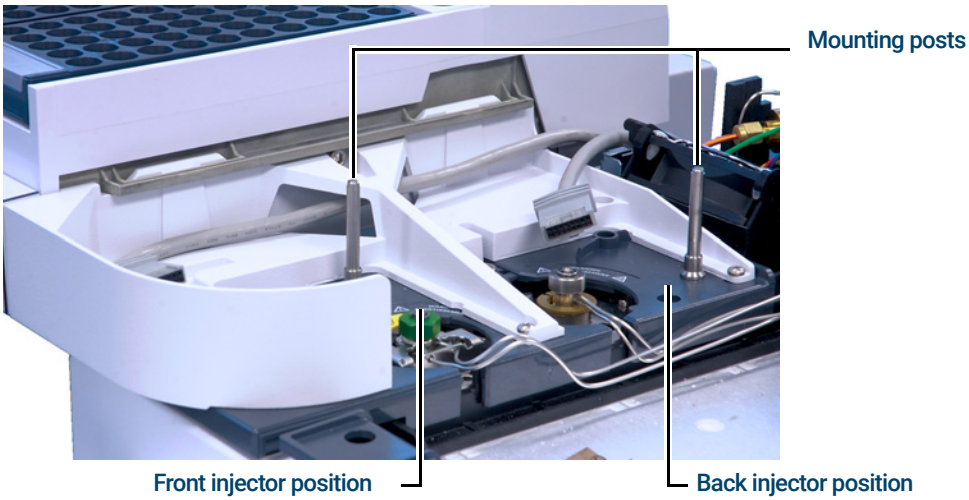

Figure 16. Installing the mounting post(s) on a 7890 Series GC (8890 GC and 8860 GC are similar)

- **6890 Series GC**. Install into the inlet cover in the front or rear location, as desired. The post must be turned all the way down (**Figure 17**).

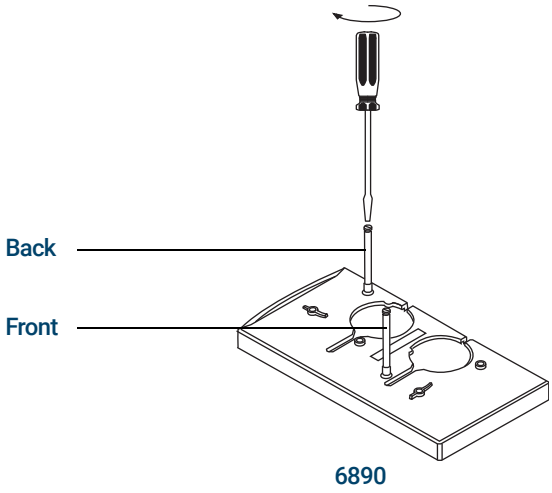

Figure 17. Installing the mounting post(s) (6890 GCs)

- **6850 Series GC**. Install into the inlet mounting bracket. Loosen the inlet screws, install the post and tighten the screws. The post must be turned all the way down (**Figure 18**).

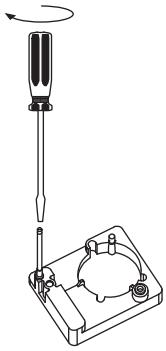

6850

Figure 18. Installing the mounting post (6850 GCs)

- 5975T LTM-GC/MSD. Install into the inlet mounting bracket. The post must be turned all the way down (**Figure 19**).

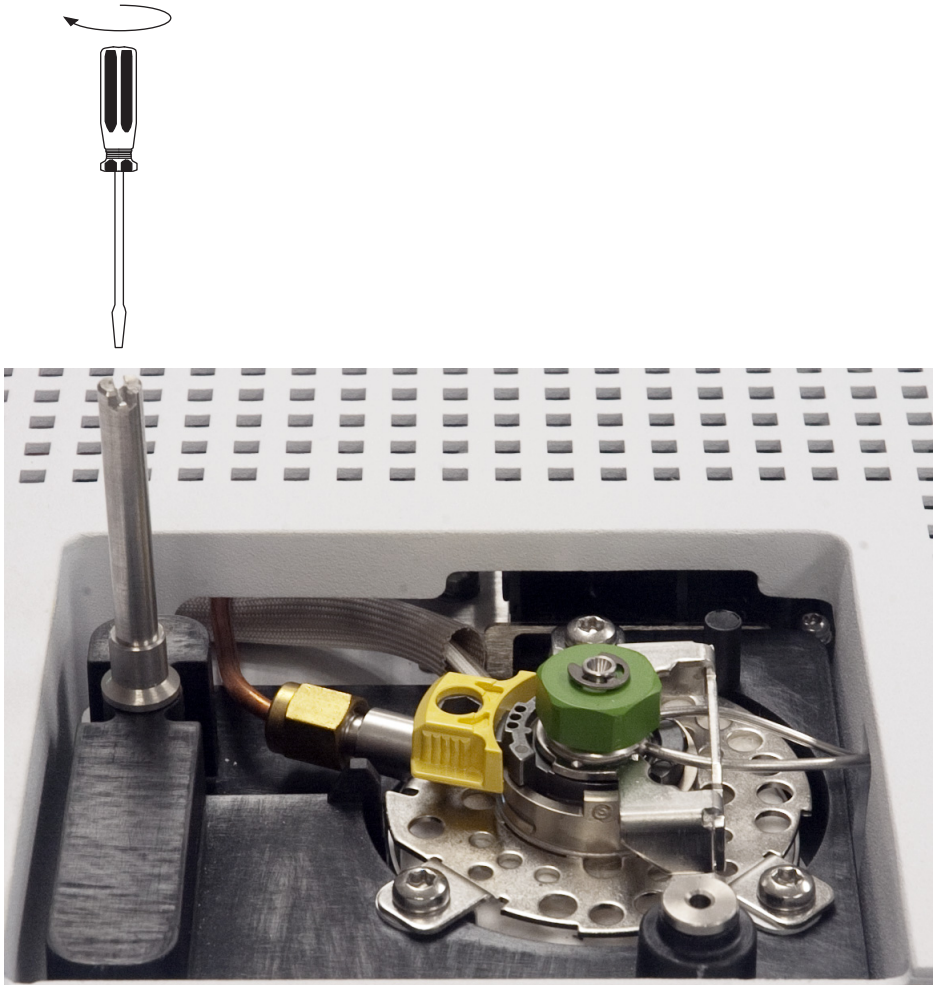

Figure 19. Installing the mounting post (5975T LTM-GC/MSD)

8 Intuvo 9000 GC. Mount the injector, then skip to **"Check your work"** on page 60.

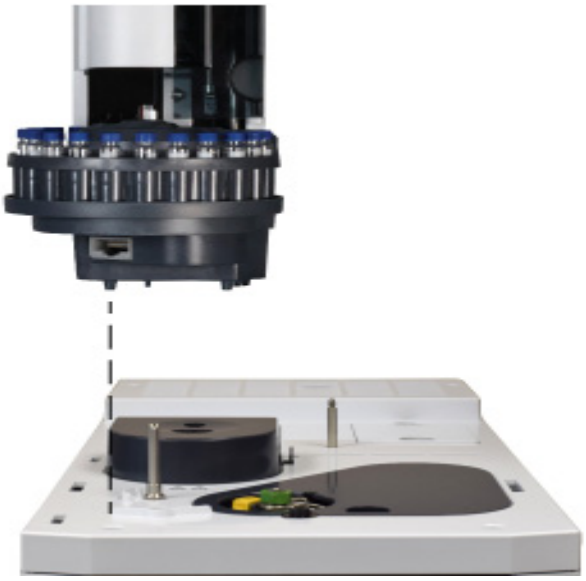

Figure 20. Mount the injector on the Intuvo 9000 GC.

9 If a sample tray is installed, route the front injector cable through the mounting bracket support structure. If installing a back injector, make sure the cable is available.

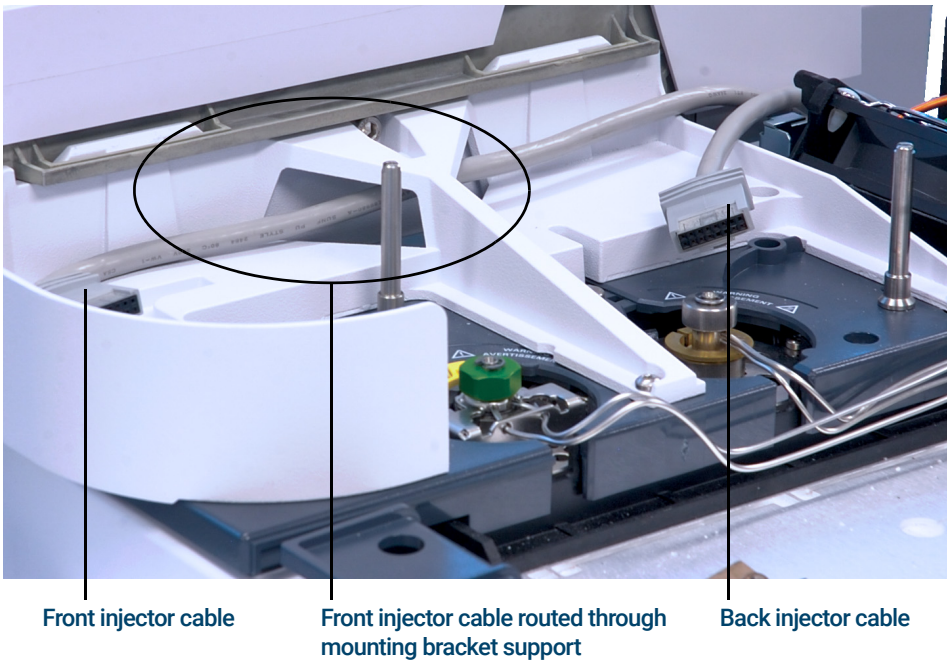

Figure 21. Front injector cable routed through mounting bracket support.

10 If installing a back injector, connect the back injector cable to the injector cable port.

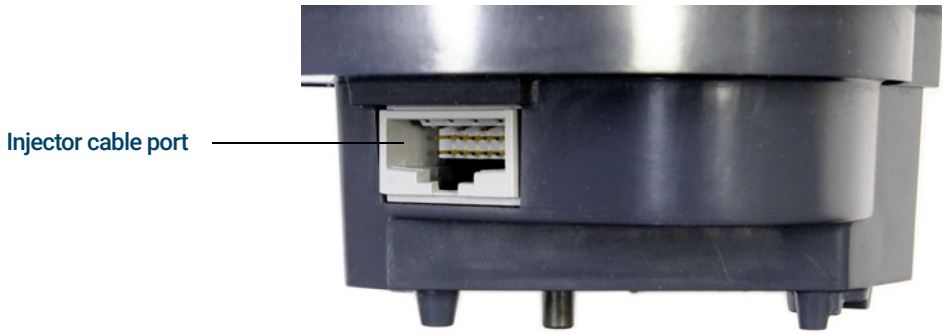

11 If installing a back injector, position the back injector on the mounting post and the back inlet cover's support foot.

12 If installing a front injector, connect the front injector cable to the injector cable port.

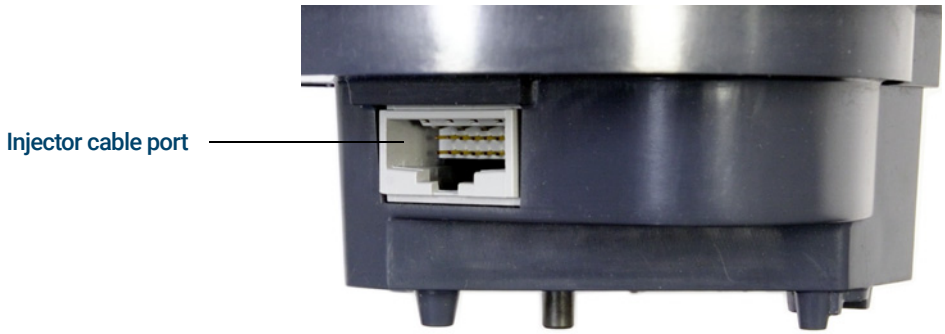

13 If installing a front injector, position the front injector on the mounting post and the front inlet cover's support foot.

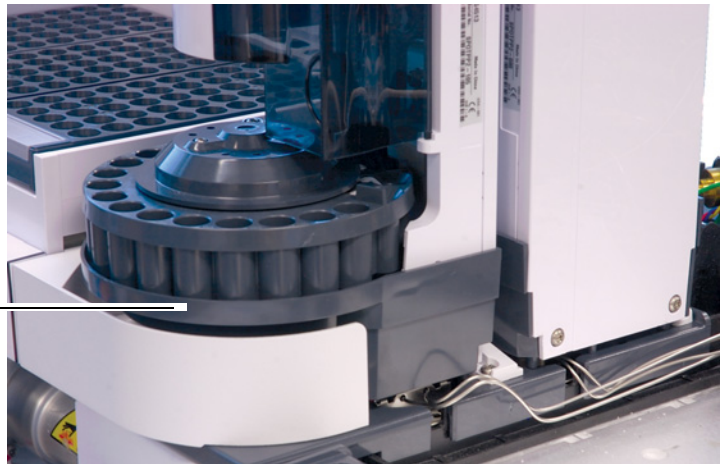

Check your work

The injector must be vertical and stable.

If the injector will not sit upright on the GC, check that the plumbing and cabling under the inlet cover are properly routed in their channels. Also verify that the front injector cable is routed correctly through the GC mounting bracket support as shown in **Figure 21** on page 58.

Choosing the Turret Type

Two interchangeable sample turrets are provided with the injector:

- The *standalone turret* allows you to analyze up to 16 samples. It holds two solvent positions and one waste bottle position. Two sample positions can be alternately configured for sample preparation. The standalone turret is not compatible with the sample tray.
- The *transfer turret* is designed to work with the sample tray to analyze up to 150 samples. The transfer turret has three sample vial transfer locations; two of which are configurable for use in sample preparation. There are six solvent A positions, four solvent B positions, and five waste positions. This turret can be used with or without the sample tray.

The injector comes with the transfer turret installed. If you wish to use the 16-sample standalone turret, see **"Changing the Turret"** for details.

No other turrets are compatible with the G4513A Injector.

Connecting the Cables

This section shows the cable routing for a 7693A ALS system with a GC.

8890 GC

Follow the instructions below to properly wire the injector and sample tray to the 8890 GC.

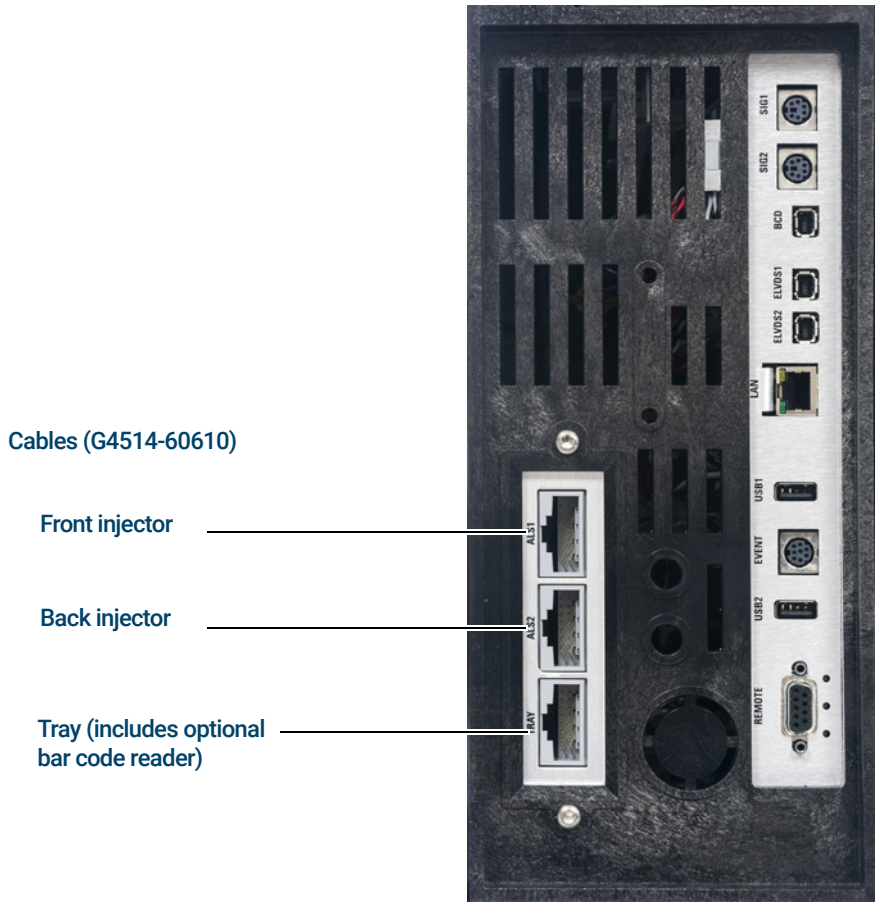

Figure 22. Cables for the 8890 GC

1. Connect the injector(s) to the GC with a G4514-60610 cable(s).
2. Connect the tray to the GC with a G4514-60610 cable.
3. Connect the GC power cord to the outlet.

8860 GC

Follow the instructions below to properly wire the injector and sample tray to the 8860 GC.

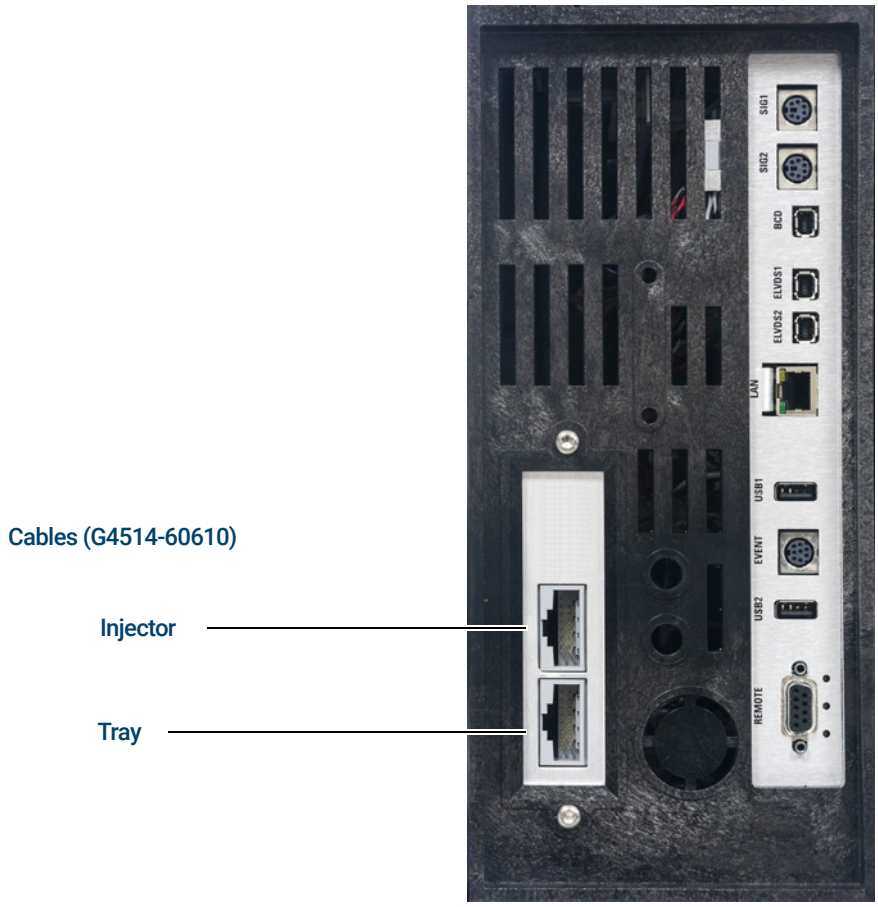

Figure 23. Cables for the 8860 GC

1 Connect the injector to the GC with a G4514-60610 cable.
2 Connect the tray to the GC with a G4514-60610 cable.
3 Connect the GC power cord to the outlet.

Intuvo 9000 GC

Connect the cable to the GC (ALS 1) connector.

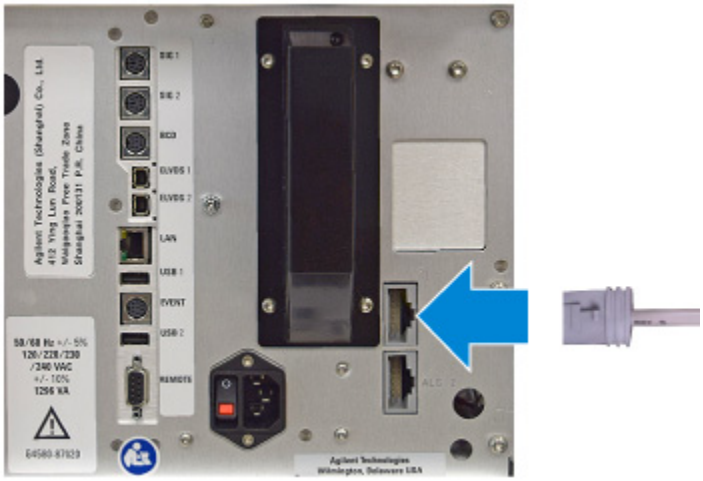

7890 Series GC

Follow the instructions below to properly wire the injector and sample tray to the 7890 Series GC.

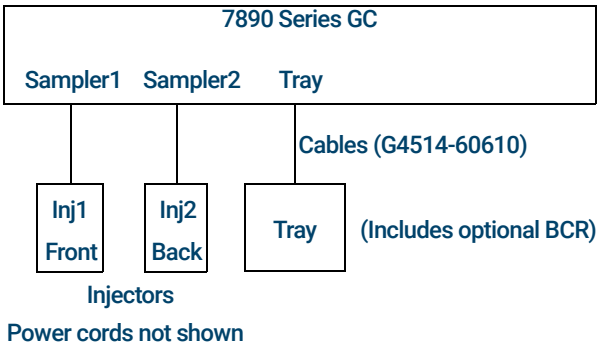

Figure 24. Cables for 7890 Series GC

1 Connect the injector(s) to the GC with a G4514-60610 cable(s).

2 Connect the tray to the GC with a G4514-60610 cable.

3 Connect the GC power cord to the outlet.

7820A GC

NOTE

7820 GCs with serial number < CN15222001 do not include a connector for a tray.

Follow the instructions below to properly wire the injector to the 7820A GC.

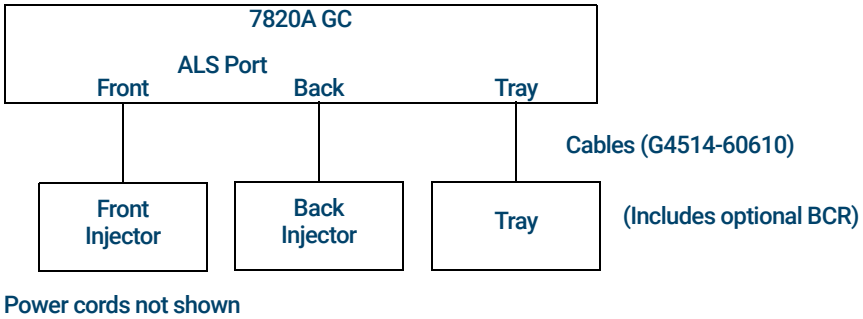

Figure 25. Cables for 7820A GC

1 Connect the injector to the GC with a G4514-60610 cable.

2 Connect the tray to the GC with a G4514-60610 cable.

3 Connect the GC power cord to the outlet.

6890N or 6890 Plus GC

Follow the instructions below to properly wire the injector and sample tray to a 6890N or 6890 Plus GC.

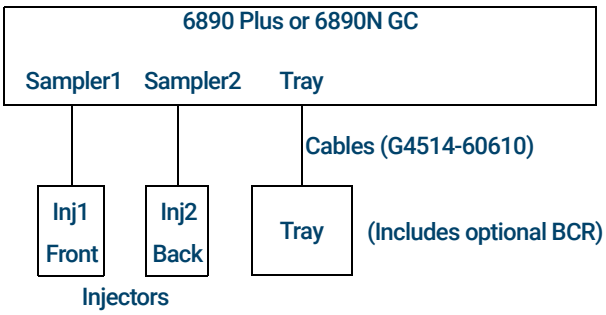

Figure 26. Cables for 6890 Plus and 6890N GCs

1 Connect the injector(s) to the GC with a G4514-60610 cable(s).

2 Connect the tray to the GC with a G4514-60610 cable.

3 Connect the GC power cord to the outlet.

6890A GC

Follow the instructions below to properly wire the 6890A GC to the G4517A ALS Controller, and the controller to the injector(s) and sample tray. See "Installing the G4526A/G4517A ALS Controller (6890A GCs)" for installation instructions for the G4517A ALS Controller including the power supply cord.

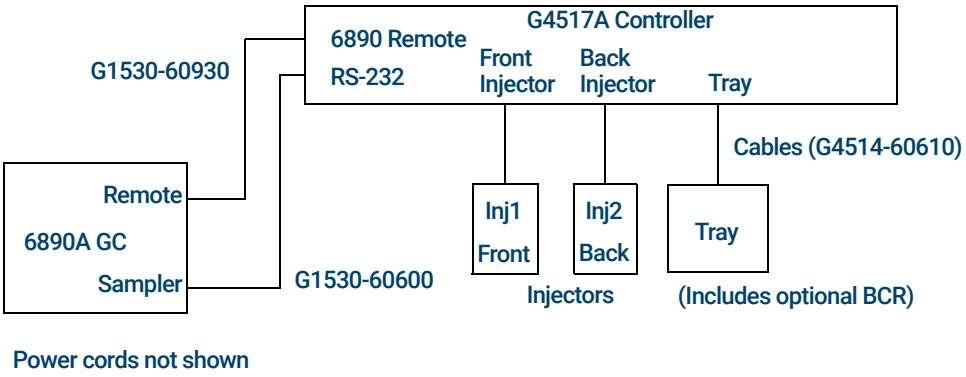

Figure 27. Cables for 6890A GC

1 Connect the injector(s) to the ALS controller with a G4514-60610 cable(s).
2 Connect the sample tray to the ALS controller with a G4514-60610 cable.
3 Connect the ALS controller to the GC with a G1530-60930 cable and a G1530-60600 cable.
4 Connect the GC and controller power cords to the outlets.

6850 Series GC

Follow the instructions below to properly wire the 6850 Series GC to the to the injector.

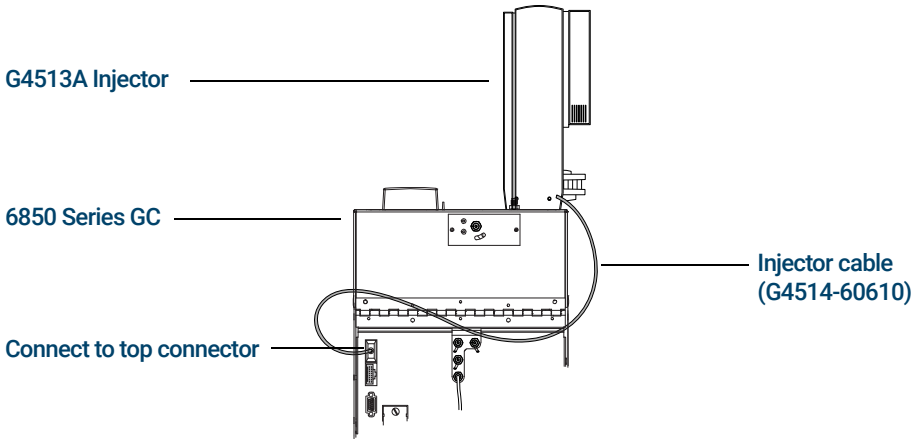

Figure 28. Cable for 6850 Series GC

1 Connect the injector(s) to the controller with a G4514-60610 cable. Use the top injector connection on the back of the GC. See **Figure 28**.

2 Connect the GC power cord to the outlet.

7820 MSD

Follow the instructions below to properly wire the injector and sample tray to the 7820 MSD.

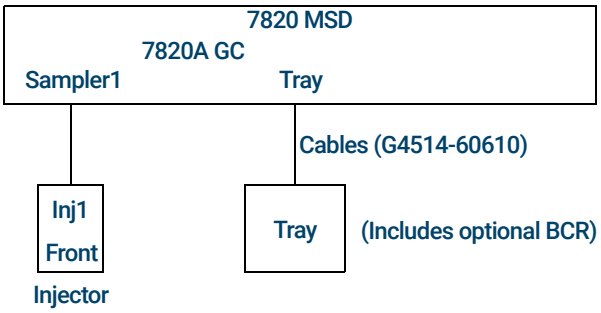

Power cords not shown

Figure 29. Cables for 7820 MSD

1 Connect the injector to the GC with a G4514-60610 cable.

2 Connect the tray to the GC with a G4514-60610 cable.

3 Connect the GC power cord to the outlet.

5975T LTM-GC/MSD

Follow the instructions below to properly wire the injector and sample tray to the 5975T LTM-GC/MSD.

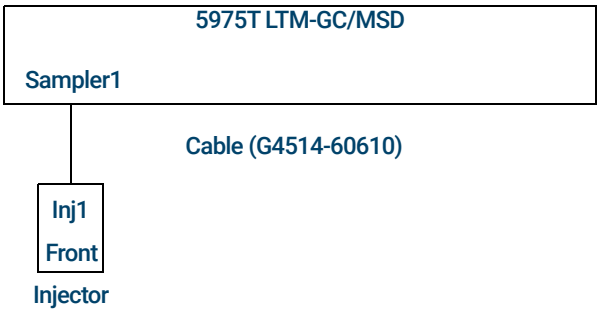

Power cords not shown

Figure 30. Cables for 5975T LTM-GC/MSD

1 Connect the injector to the GC with a G4514-60610 cable.

2 Connect the GC power cord to the outlet.

Test the connections

When the cables are connected, turn on the GC power. After the start-up process ends:

- The Ready light on the injector tower should be on.
- If the Align Mode light on the injector tower is on, see **"Aligning the Injector"**.
- If the Fault light on the sample tray is on, see **"Faults"**.

Parking the Sample Tray

If a sample tray is installed, follow the procedure below to park the sample tray. If you do not have a sample tray, skip this section.

1 Power on the GC.

2 Park the sample tray by pushing the **[P]** button on the sample tray front panel.

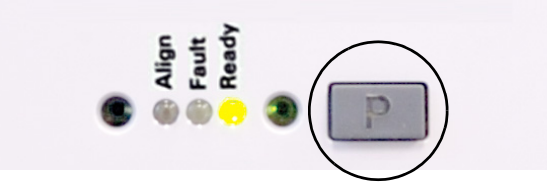

The gantry will move to the far-left position (away from the tray bracket), and gripper jaw will move to the far-back position (away from the tray front panel). This allows for clear access to the tray base.

NOTE

To operate the sample tray, the gantry must be out of the Park position. Press [P] on the tray front panel to move the gantry from the Park position to the Home position.

Installing the Vial Racks

If a sample tray is installed, follow the procedure below to install the vial racks. If you do not have a sample tray, skip this section.

Install the vial rack labels

Before using the vial racks, you must install the vial rack labels:

1. Place the vial racks on a flat surface.
2. Align the vial rack label with the front of the vial rack so that the lip of the vial rack label fits over the front of the vial rack. The tabs on the underside of the vial rack label will align with the insert holes on the vial rack.
3. Press the vial rack label down into the vial rack until it snaps into place.

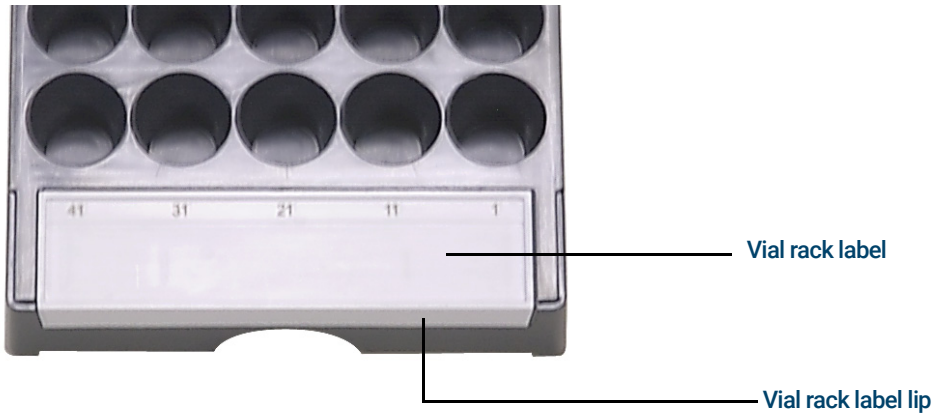

Install the vial racks

1 After the vial rack labels are installed, lower the back end of the vial rack into the tray base.

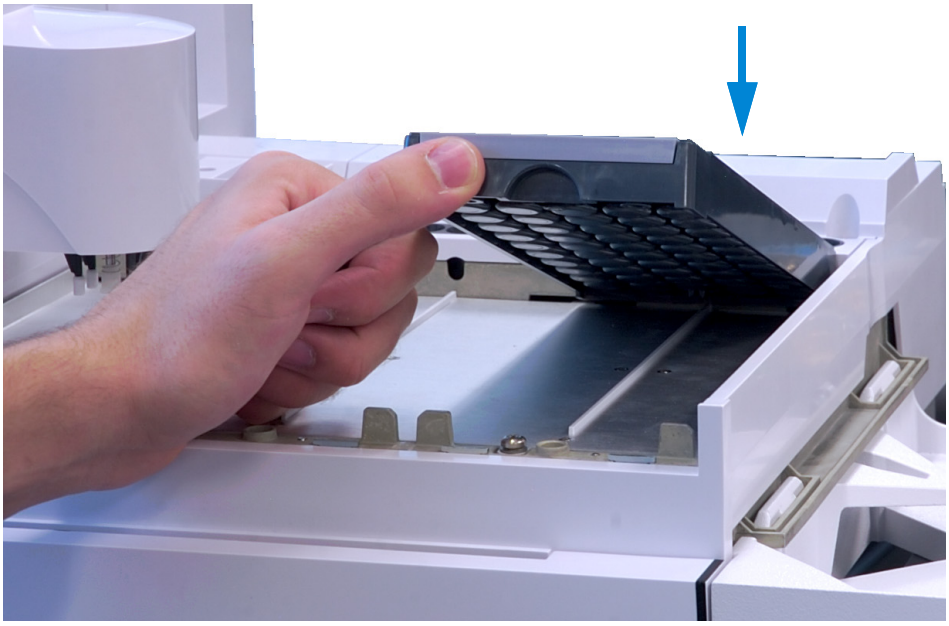

2 Align the tab found on the back side of the vial rack with the hole in the tray's back wall.

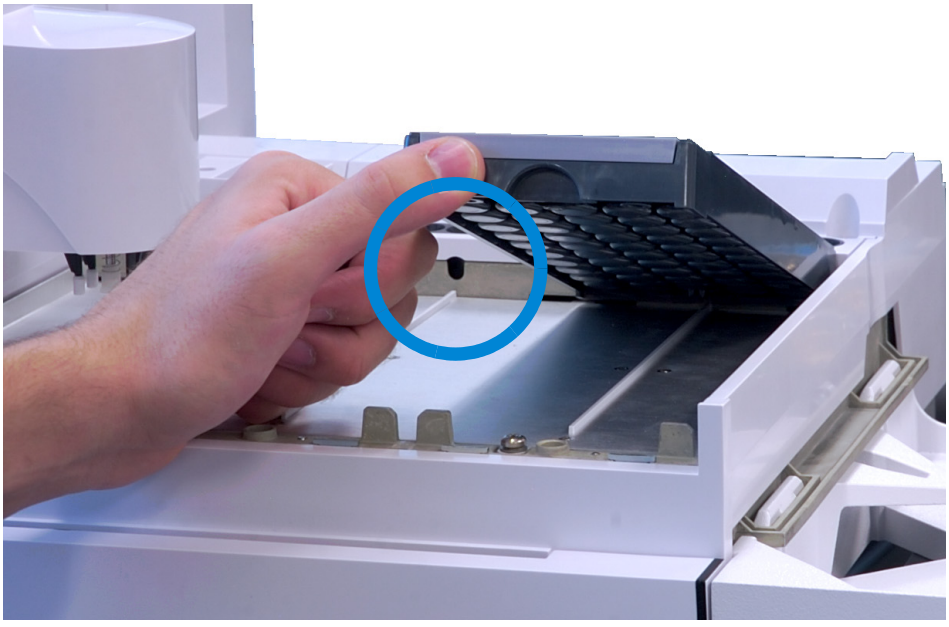

3 Lower the front of the vial rack so that it fits into place and rests flat on the tray base. The LED light below each vial rack will light if the vial rack is present. Be sure to install the vial racks so the vial rack label numbers are in sequential order from right to left.

4 Repeat the process for the two remaining vial racks.

Remove the vial rack labels

Skip this section if you do not wish to remove the vial rack labels. To remove the vial rack labels:

1. Hold the vial rack upside-down.
2. Using your free hand, pinch the two tabs towards each other until the vial rack label snaps out of the vial rack.

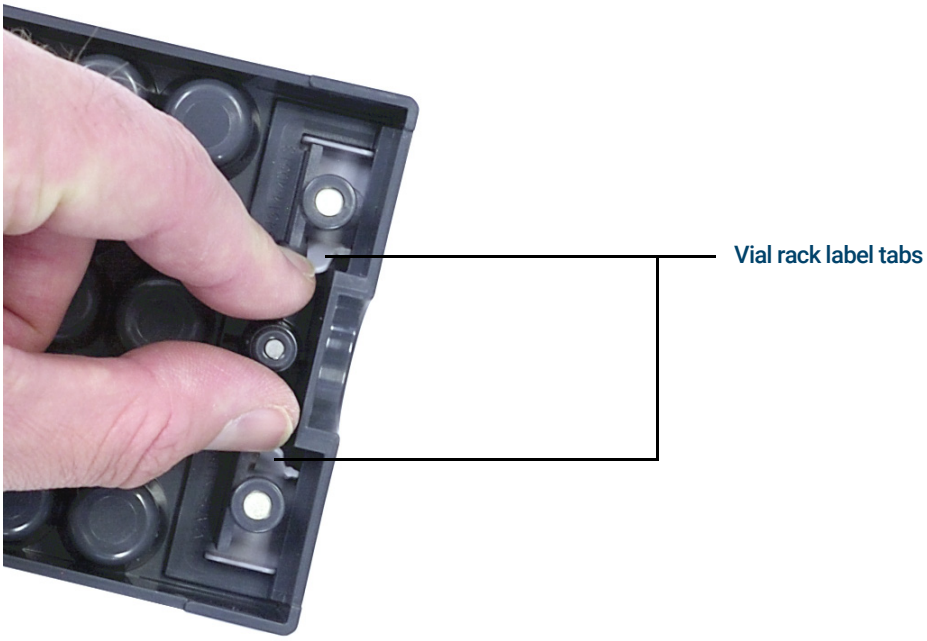

Updating the Firmware

The 7693A ALS requires the firmware revisions noted in **Table 2**. Before using the 7693A ALS system, check the firmware revisions as described below.

Use the Agilent Firmware Update tool to update GC and ALS firmware. The tool is available from the Agilent web site. You can download the latest firmware revisions from the Agilent web site at www.agilent.com or contact your local Agilent sales representative.

Failure to update the firmware will result in unrecognized components, vial delivery errors, or fewer available features.

View the current firmware version

To view the current firmware version for the GC or installed ALS components:

All GCs

Power cycle the instrument. When it reboots, it displays the current firmware version.

8890 GC and Intuvo 9000 GC

Touch ⚙ **(Settings) > About**.

8860 GC

Touch ⚙ **(Settings) > About**.

7890 Series GC

Press **[Status] > [Clear]**, or press **[Service Mode] > Diagnostics > Instrument status** to display the current GC firmware version. To view the current ALS component firmware, press **[Service Mode] > Diagnostics > ALS Status**. Scroll through the menu to view the ALS controller, Front/Back Tower, Tray, and BCR firmware versions.

7820A GC, 7820 MSD

Using the software keypad, press **[Status] > [Clear]**, or press **[Service Mode] > Diagnostics > Instrument status** to display the current GC firmware version. To view the current ALS component firmware, press **[Service Mode] > Diagnostics > ALS Status**. Scroll through the menu to view the ALS controller, Front/Back Tower, Tray, and BCR firmware versions.

All 6890 GCs

Press **[Options]**, then select **Diagnostics > Instrument Status**. Scroll down to view the GC and ALS component firmware versions. For 6890A GCs the G4517A ALS Interface Controller, Front/Back Tower, Sample Tray, and BCR firmware versions are displayed. For 6890N GCs the sample tray and BCR firmware versions are displayed.

5975T LTM-GC/MSD

Press **[Menu]** to scroll to **+ Version** or **+ LTM GC**, and use the **[Item]** key to scroll to the desired component firmware information. Use an Agilent data system to view the injector firmware information.

Update the firmware

To update firmware, use the Agilent GC Firmware Update utility, available from the Agilent web site at **www.agilent.com**. Refer to the software help and user documentation for firmware update information.

Once you connect to an instrument in the software's **Firmware Update** screen, no other tasks can be performed on the instrument until you disconnect.

6890A and 6890 Plus GCs

These GCs use programmable chips that must be physically replaced. Contact your local Agilent service representative.

Configuring the GC and Data System

Configure the GC

When hardware installation is complete, configure your GC for use with the 7693A ALS system. See **"ALS Configuration"** for details. Be sure to check:

- Injector usage
- Solvent bottle usage
- Solvent volume usage

Configure the data system

Configuration

Agilent data systems contain information about the sampling equipment in use. This must be updated to remove the old information and replace it with information about the new equipment that you have installed. See your data system documentation for details.

Upgrading methods

Before using methods created for a previous sampler system, be sure to edit them as needed to match the new hardware.

Calibrating the ALS System

If a sample tray is installed, follow the procedure below to calibrate the ALS system. If you do not have a sample tray, skip this section.

The ALS system calibration process aligns the sample tray with the injector turret position so vial transfers occur without incident. Calibration should be performed if a calibration does not exist, and also as a routine maintenance procedure.

Calibrating the ALS system is recommended if any ALS components are moved.

To calibrate your ALS system:

1 Place the calibration vial (G4514-40588) in tray position 1 (**Figure 31**).

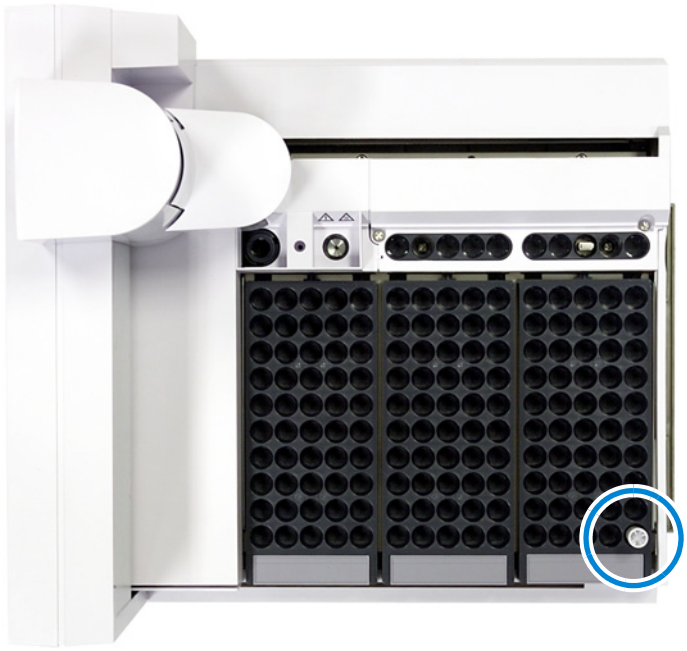

Figure 31. Tray position 1

2 Remove any vials from transfer turret positions L1, L2, and L3 for all installed injectors (**Figure 32**).

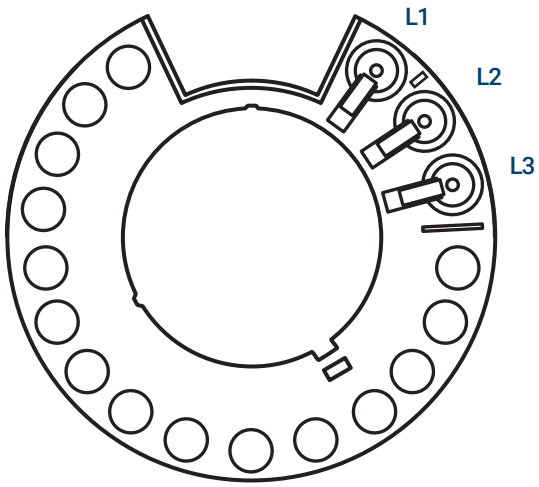

Figure 32. Transfer turret positions L1, L2, L3 (top view)

3 Start the ALS system calibration:

- On a 7890A GC, use the GC front keypad and select [Options] Calibration > ALS > Start Calibration.
- On a 6890 Series GC, use the GC front keypad and select [Options] Calibration > Sample tray > Start Calibration.

- On an 8890 GC or an Intuvo 9000 GC, use the GC touchscreen (shown below) or browser interface. For the 8860 GC, use the browser interface. Go to ⚙ **(Settings) > Calibration > ALS/Tray > Tray**, and select **Start Calibration**:

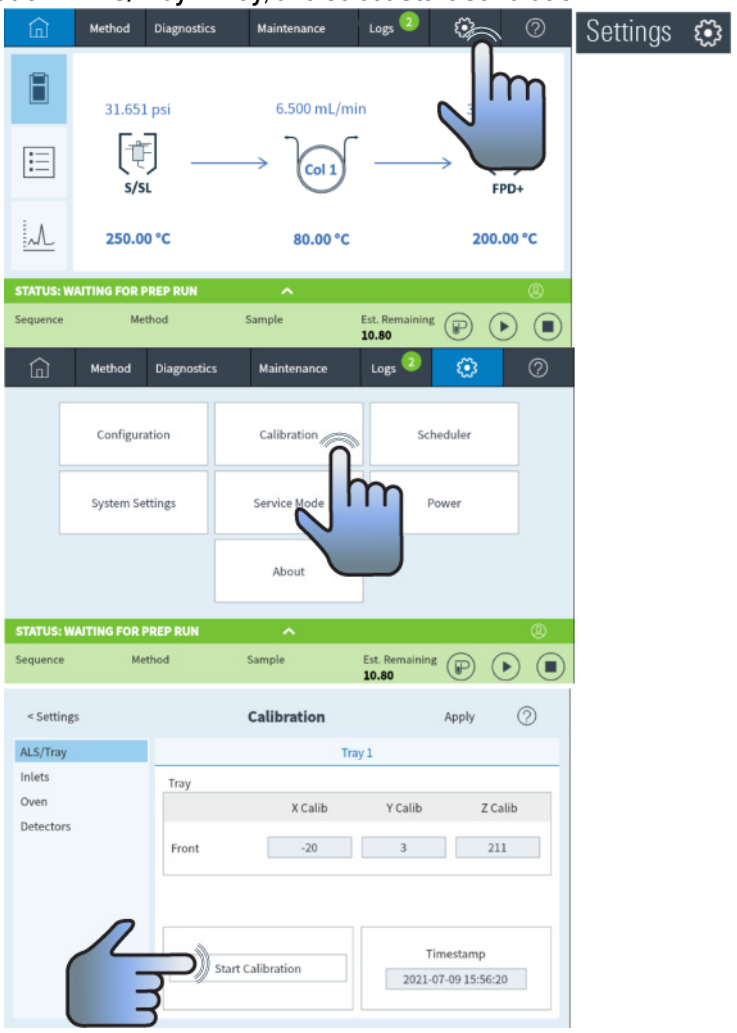

The following calibration process will occur for all installed injectors:

a The tray assesses the turret alignment by placing the calibration vial into turret position L1 and returning to sample tray position 1.

b The tray tests the vial height and turret position by using the alignment tab between positions L1 and L2 on the transfer turret.

c The tray verifies the turret alignment by placing the calibration vial into turret position L1 and returning it to sample tray position 1.

4 When the calibration process is complete, the green Ready status light will come on and the gantry will stop in the Home position (**Figure 70** on page 193).

Remember to replace any vials that were moved for the calibration process.

Making a Trial Run

Once installation, configuration, updating, and calibration is complete, make a quick injection using the sampler to verify that it works properly.

1 Install an empty syringe in the injector.

2 **If using the G4514A Sample Tray with the G4513A Injector**, make sure the transfer turret is installed. See **"Changing the Turret"** for details.

If using only the G4513A Injector, replace the transfer turret with the standalone turret, if desired. See **"Changing the Turret"** for details.

3 Place empty bottles in all the Solvent A and Waste A turret positions. Place an empty capped sample vial in the tray 1 position (or the turret sample 1 position, if not using the sample tray).

4 Make the sampler settings shown in **Table 4**. These are designed for an 8890 GC. If you are using a different GC, use these settings as a guide.

For 8890 and Intuvo 9000 GCs	Use the GC touchscreen, GC browser interface, or Agilent data system
For 8860 GCs	Use the GC browser interface or Agilent data system
For 7890A and 6890 GCs	Use the front keypad or Agilent data system
For 7820 GCs	Use the remote keyboard or Agilent data system
For 6850 GCs	Use your Agilent data system
For 7820 MSDs	Use your Agilent data system

Table 4 Trial run parameters

Parameter	Setting
Injection volume	1.00
Viscosity delay	0
Inject Dispense Speed	6000
Airgap Volume	0.20
Sample Pumps	6
Sample Washes	0
Solvent A post washes	1
Solvent A pre washes	1
Solvent B post washes	0
Solvent B pre washes	0
Sample Draw Speed	300
Pre dwell time	0

Table 4 Trial run parameters (continued)

Parameter	Setting
Post dwell	0
Sample offset	0
Injection Mode	Normal (1-layer injection)
Tower LED	On

5 Set the GC oven program to 30 °C (or current room temperature) with a 0 °C/min ramp, a hold time of 0.1 minutes, an equilibrium time of 0.3 minutes, and an initial time of 0.3 minutes.

6 Store, load, then run the sequence.

If there are no faults, the injector will make one injection from the first vial position.

If problems occur, see "**Faults**", "**Error Messages**", "**Correcting Syringe Problems**", or "**Correcting Sample Vial Delivery Problems**".

4 Accessories

Installing the G4526A/G4517A ALS Controller (6890A GCs) 84

Installing the G4526A/G4516A ALS Interface Controller (6890 Plus GCs) 88

Installing the G4515A Bar Code Reader/Mixer/Heater 91

Installing the G4522A Heating and Cooling Plate 99

The procedure for installing the 7693A ALS accessories depend on the system components purchased and the type of GC involved. Follow the steps in this chapter that are relevant to your GC and ALS system setup.

Installing the G4526A/G4517A ALS Controller (6890A GCs)

This procedure applies to the 6890A GC only. If you do not have a 6890A GC, skip this section.

Controller site requirements

This procedure explains how to install the G4517A ALS Controller on a 6890A GC.

Temperature and humidity ranges

The ALS system is designed for indoor use only in ordinary atmospheres.

Temperature range	5 °C to 55 °C
Relative humidity range	Maximum relative humidity of 80% for temperatures up to 31 °C decreasing linearly to 50% relative humidity at 40 °C
Altitude range	Up to 4300 m

After exposing the ALS controller to extremes of temperature or humidity, allow 15 minutes for it to return to the recommended ranges.

Ventilation requirements

The controller is cooled by air flow which enters the front of the instrument and exits through the rear. Do not4obstruct air flow in the front or rear of the instrument.

Benchtop space requirements

Figure 33 shows the space requirements around the controller. The area in the back of the controller must be kept clear for easy operation of the power switch and the front of the controller requires access to the front panel buttons.

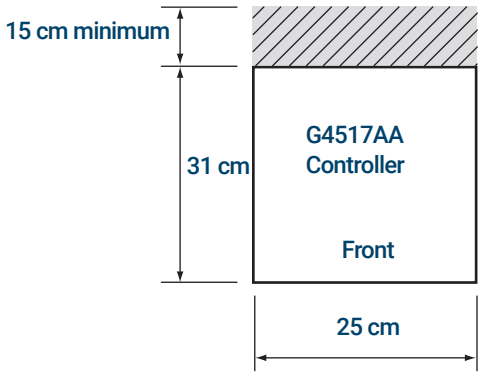

Figure 33. Benchtop space requirements

Dimensions

25 cm (9.84 in) wide × 31 cm (12.2 in) deep × 11 cm (4.33 in) high × 5 kg (11 lbs) weight

Orientation

The G4517A ALS Controller is designed to be installed in a horizontal orientation as shown in **Figure 34**. If mounted in the vertical orientation, the probability of tipping increases with the possibility of injury to personnel.

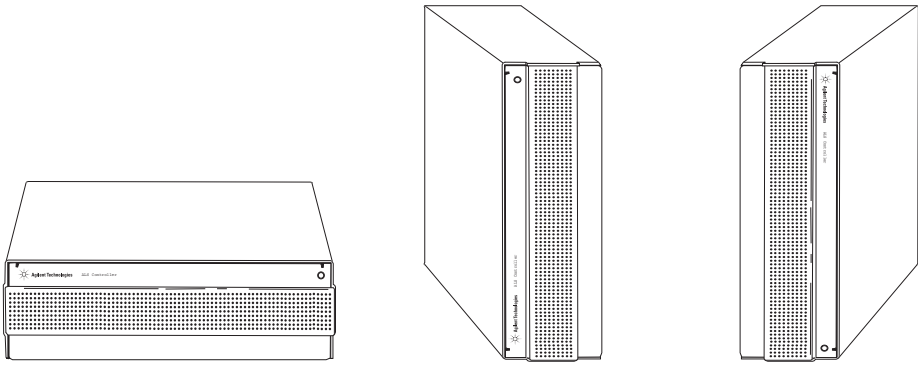

Horizontal recommended **Vertical**

Figure 34. ALS controller orientation

Electrical requirements

CAUTION

A proper earth ground is required.

Grounding To protect users, the cabinet is grounded through the three-conductor power line cord in accordance with International Electrotechnical Commission (IEC) requirements.

The three-conductor power line cord, when plugged into a properly grounded receptacle, grounds the instrument and minimizes shock hazard. A properly grounded receptacle is one that is connected to a suitable earth ground. Proper receptacle grounding should be verified.

WARNING

Any interruption of the grounding conductor or disconnection of the power cord could cause a shock that could result in personal injury.

Line voltage The G4517A ALS Controller operates from one of the AC voltage supplies listed in **Table 5**, depending on the standard voltage of the country from which it was ordered. It is designed to work at a specific voltage; make sure your instrument's voltage option is appropriated for your lab. The voltage requirement is printed near the power cord attachment. See **"Verify the power configuration"** on page 87 for setting the proper voltage for this controller.

Table 5 Voltage requirement by country

Country	Voltage	Part number
Americas, 10 amp	120 V	8120-1378
Argentina	220 V	8120-6869
Australia, 10 amp	240 V	8120-1369
Chile, 10 amp	220 V	8120-6978
China, 10 amp	220 V	8121-0723
DK/Greenland, 10 amp	220 V	8120-3997
Europe, 10 amp	230 V	8120-1689
GB/HK/SG/MY, 10 amp	240 V	8120-8705
India/S Africa, 10 amp	240 V	8120-4211
Israel, 10 amp	220 V	8120-5182
Japan, 10 amp	200 V	8120-4753
Korea, 10 amp	220 V	8121-1226
Switzerland, 10 amp	230 V	8120-2104

Verify the power configuration

The G4517A ALS Controller can be configured for either 110–120 V power or for 220–240 V power.

CAUTION

Failure to configure the correct voltage setting will blow the fuses.

To determine the current power configuration, look at the back panel of the controller. The fuse holder module below the power cord receptacle is labeled with 220–240 V on one edge and with 110–120 V on the other (**Figure 35**).

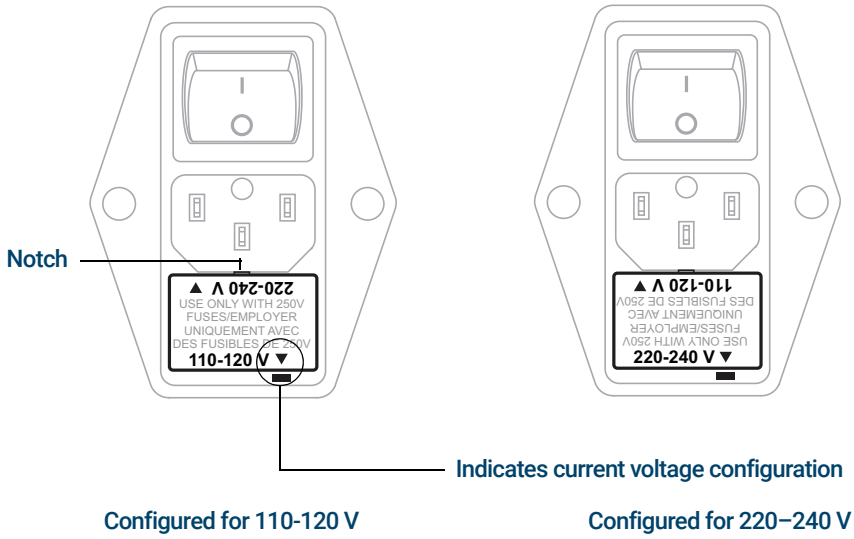

Figure 35. G4517A power configurations

To change the power configuration, remove the fuse holder module using a small, flat-bladed screwdriver in the notch at the top of the fuse holder. Turn it over and reinstall. See **Figure 35**.

Installing the G4526A/G4516A ALS Interface Controller (6890 Plus GCs)

This procedure explains how to install the G4516A ALS Interface controller board on the 6890 Plus GC. If you do not have a 6890 Plus GC, skip this section.

The G4516A ALS Interface controller board must be present in a 6890 Plus GC to operate the 7693A ALS. The GC must have a serial number greater than 20,000.

WARNING **Before proceeding, turn off the main power switch and unplug the power cord.**

CAUTION **Make sure you are properly grounded with an ESD strap before continuing.**

1 Remove the GC back panels and the right side cover.

CAUTION **Attempting to slide the entire board under the locking tab will damage the board's components.**

2 Hold the board upright and slightly angled (**Figure 36**).

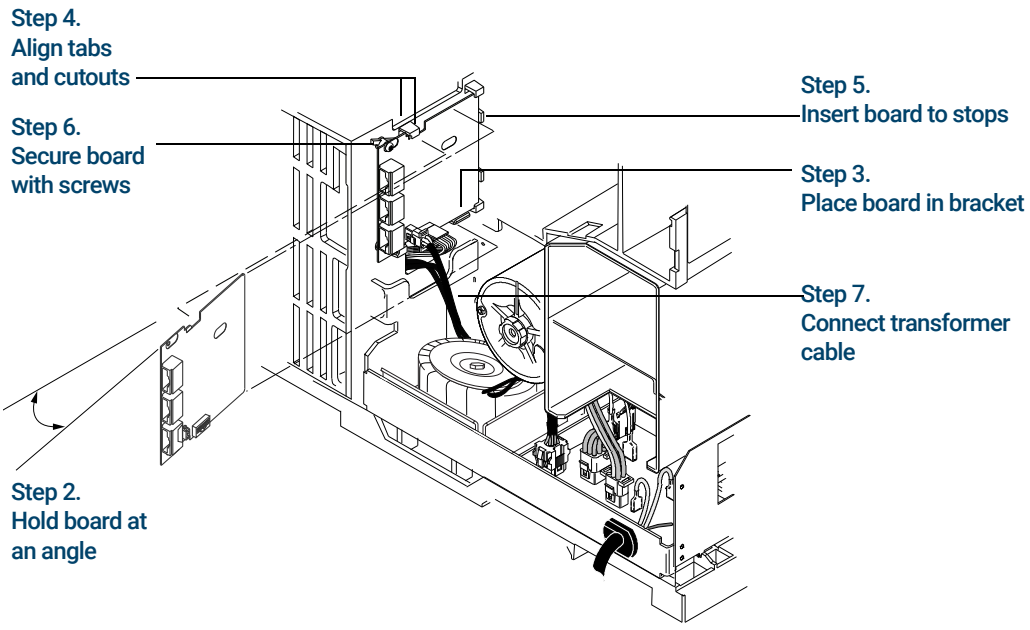

Figure 36. Installing the ALS interface board

3 Place the board onto the mounting bracket.

4 Slide it into the bracket until the cutouts in the board are aligned with the locking tabs in the bracket.

5 Lay the board against the chassis then slide it in until it stops. The locking tabs should hold the board in place.

6 Secure the board to the chassis using two screws. The board should not be stressed or bowed against the locking tab (**Figure 36**).

7 Locate the 2-wire cable leading from the transformer and connect it to the ALS Interface board at J5. (**Figure 36** and **Figure 37**).

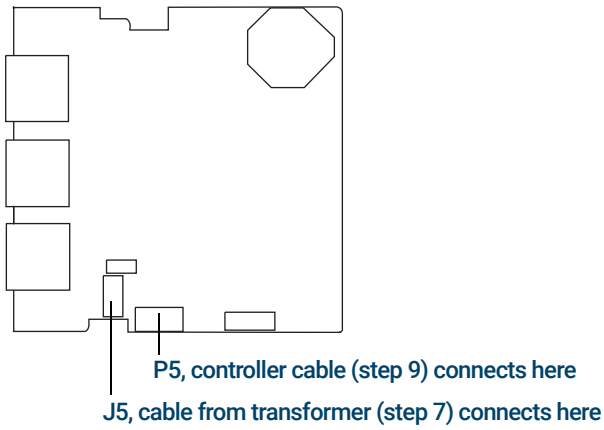

Figure 37. ALS interface connectors

8 If an MIO card (LAN card) is installed, loosen its two mounting screws and slide the card out of the GC (**Figure 38**).

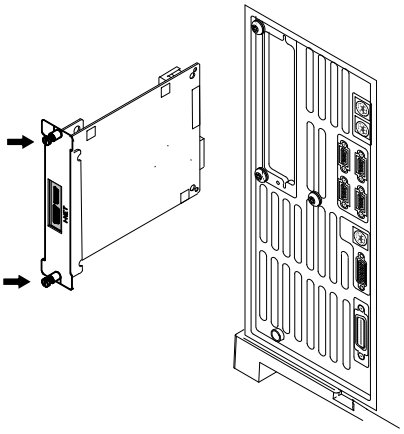

Figure 38. Removing the LAN card

9 Connect the Controller PCB Cable, part no. G2612-60510, to the main board at J8 and to the ALS Interface board at P5. Route the cable through the cutout in the main board (**Figure 37** and **Figure 39**).

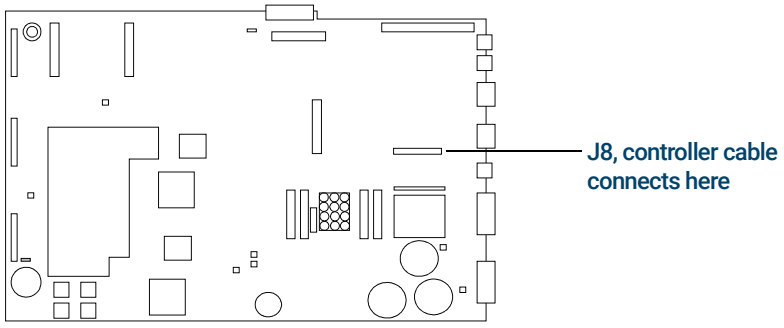

Figure 39. GC main board

10 If an MIO card was removed from the GC, re-install it.

11 Using a nut driver, remove the cover plate over the three holes labeled *Injector 1 (default front)*, *Injector 2 (default back)*, and *Tray* from the rear panel. Save the plate and nuts so you can reinstall them to prevent access to the high voltage area of the GC if you ever remove the ALS interface board in the future.

12 Re-install the GC covers.

Installing the G4515A Bar Code Reader/Mixer/Heater

If you have purchased a separate G4515A Bar Code Reader/Mixer/Heater accessory, install it now. Otherwise skip this section.

Remove the sample tray from the GC

1. Set the GC inlets, detectors, and oven to room temperature.
2. Park the sample tray by pressing the **[P]** button on the front tray panel.
3. After the GC inlets, detectors, and oven have cooled, turn off the GC and unplug the power cord.
4. Unplug the sample tray cable.
5. Unplug all injector cables.
6. Remove all vials from the injector turrets.
7. Remove all injectors from the GC inlet area. If desired, mount the injectors on any available parking posts.
8. Remove all vial racks from the sample tray.
9. Completely remove the three T-30 Torx screws securing the sample tray to the mounting bracket.
10. Carefully remove the sample tray from the GC mounting bracket.

Install the G4515A Bar Code Reader/Mixer/Heater

1 With the gantry in the far-left position, loosen the two T-20 screws securing the unknown vial station cover, and remove the plastic cover.

2 Slide the gantry towards the tray bracket as far as it will go.

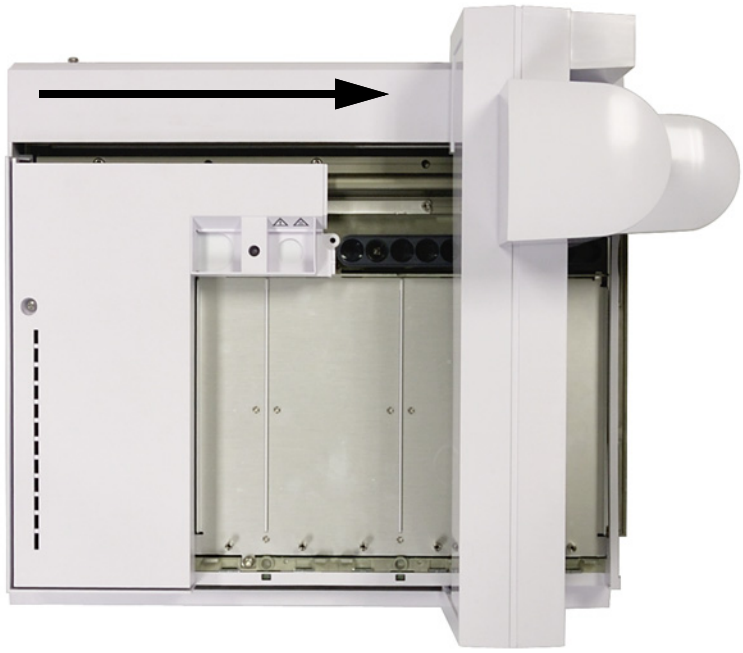

3 Loosen the T-20 Torx screw and remove tray cover.

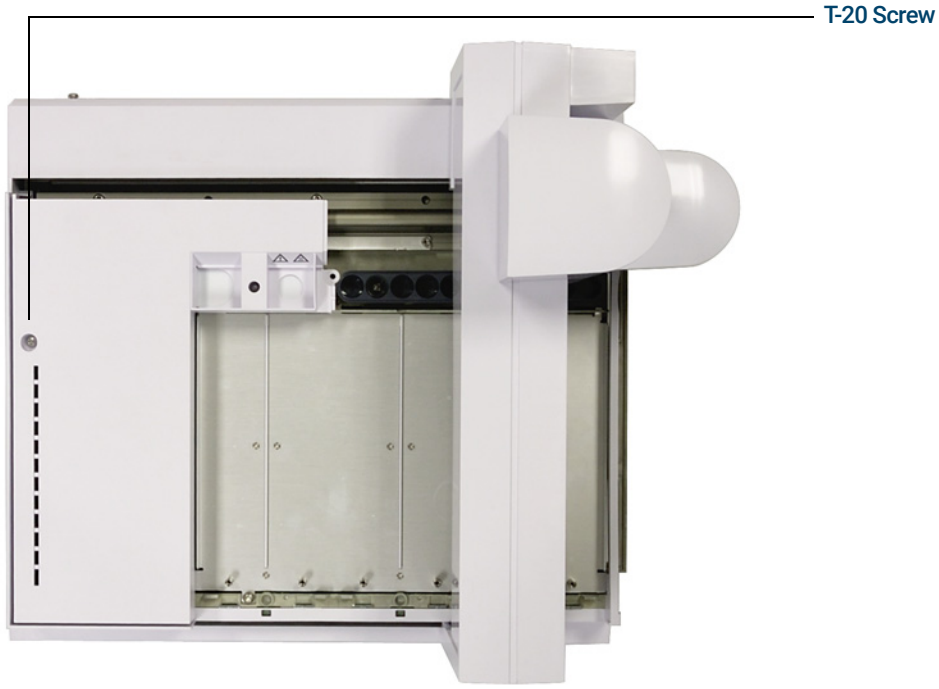

4 Set the tray cover on a flat surface and remove the T-10 Torx screw that fastens the blanking plate to the tray cover. The blanking plate will fall to the surface below the tray cover when the screw is completely removed.

5 Move the G4514-60601 cable to the side.

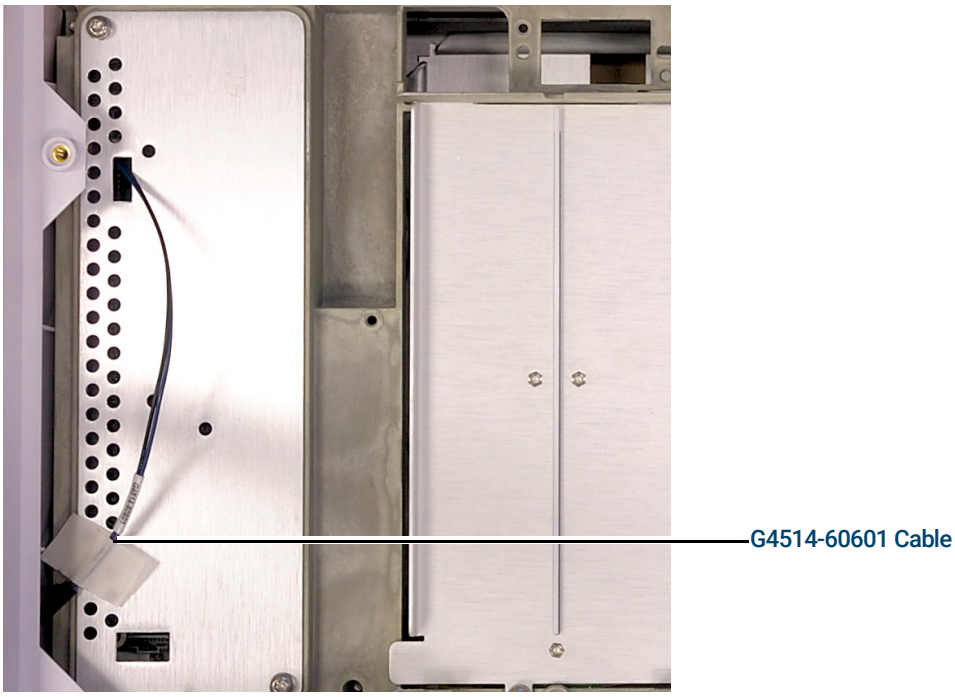

6 Place the Bar Code Reader in the tray and secure with three screws.

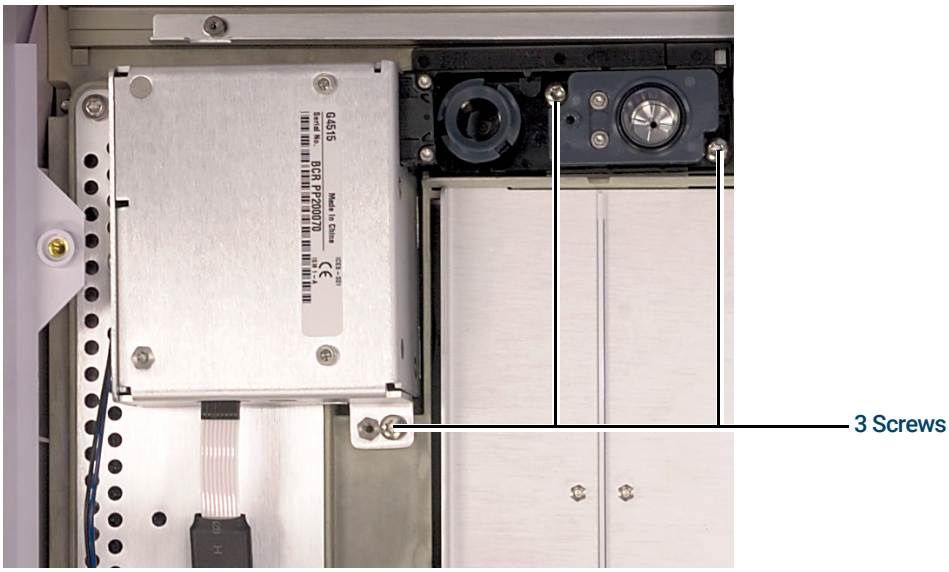

7 Connect the BCR ribbon cable and power cable.

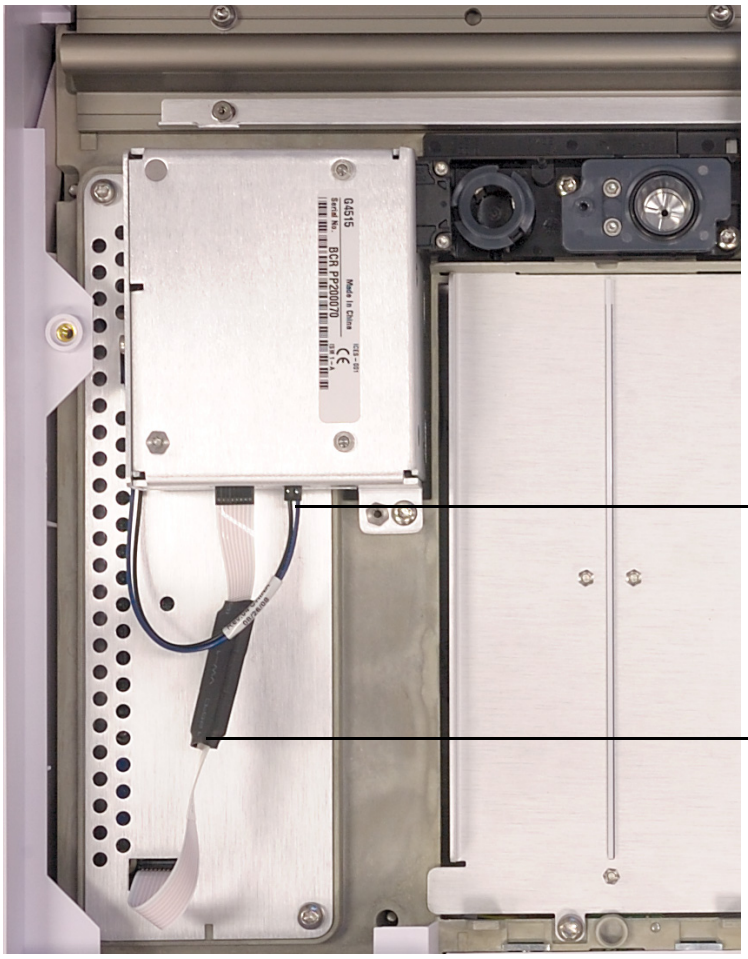

8 Reinstall the tray cover. Make sure the tray cover edge does not pass the outer housing edge. Push the tray cover towards the front of the tray as far as possible before installing screws.

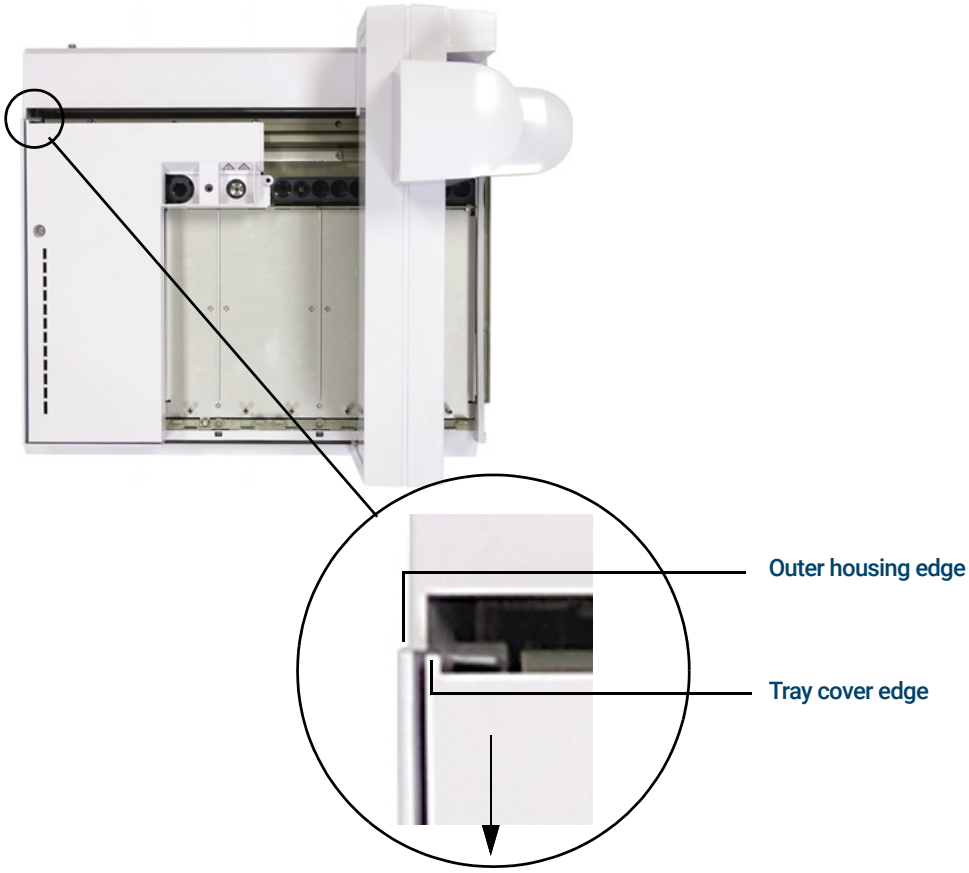

9 Install the T-20 Torx screw.

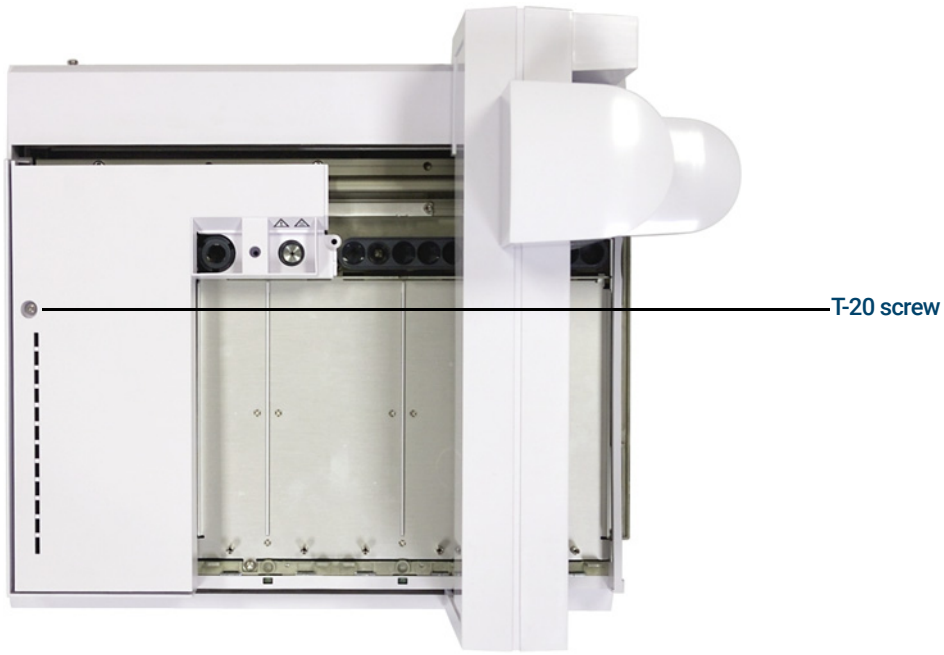

10 Install the self-tapping screw (0624-0681) supplied with the BCR accessory kit using a T-10 Torx driver.

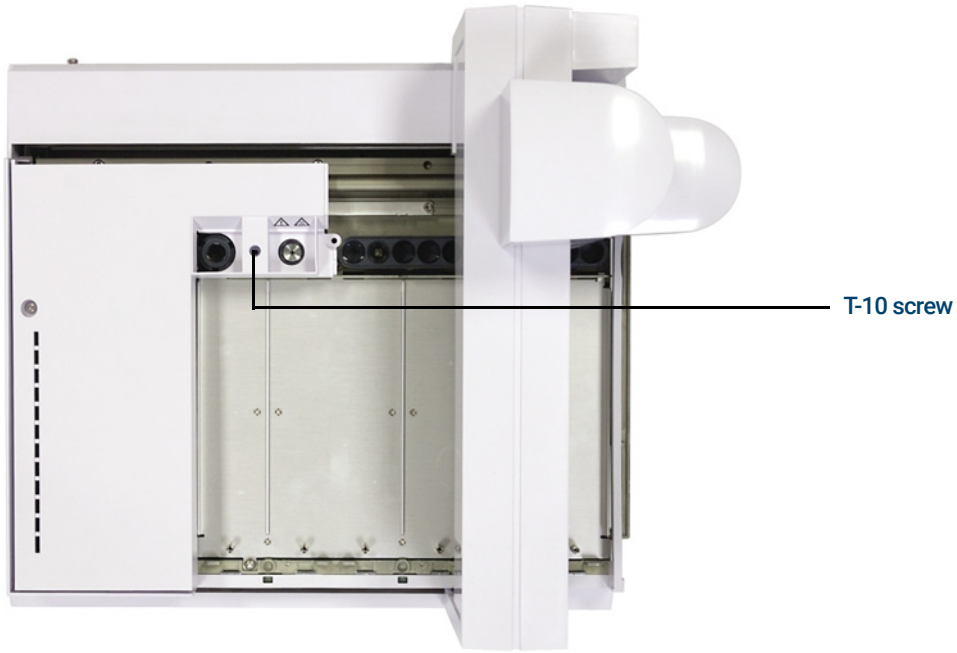

11 Slide the gantry to the opposite end of the tray, and replace the unknown vial station cover.

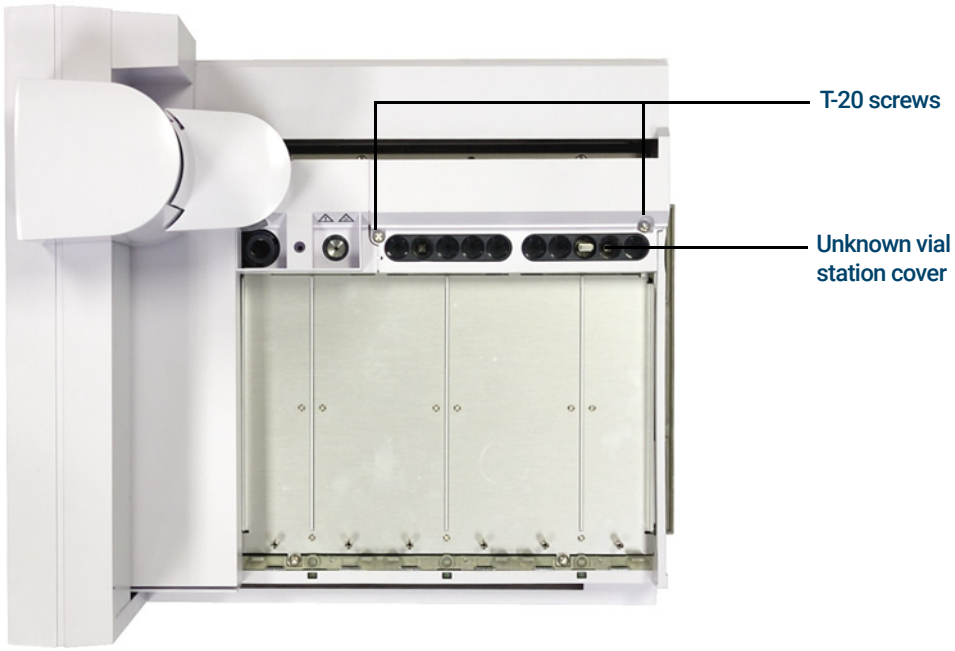

12 Tighten the two T-20 Torx screws to secure the unknown vial station cover to the sample tray.

13 If you wish to install an optional 1/8-in ID heater vent line, remove the bottom access panel on the underside of the sample tray using a T-20 Torx driver. Otherwise, skip to the next section.

14 Remove the Heater Vent Base (G4515-20532) using a straight blade screwdriver.

15 Attach the 1/8-in ID vent line to the BCR, and route the vent tubing out through the bottom access panel. Three wire saddles (1400-3408) and three M3 x 4 screws (0515-0663) are provided to help route the vent tubing.

Installing the G4522A Heating and Cooling Plate

This section describes how to install the G4522A Heating And Cooling Plate on the G4514A Sample Tray.

This section does not explain how to set up a water bath and pump.

You can control the temperature of the sample vials in the tray by pumping temperature-controlled liquid through the heating and cooling plate installed underneath the vial racks.

CAUTION

Ensure that the drainage tube is attached to the base of the sample tray. If possible, remove any equipment from underneath the tray or take steps to protect any equipment underneath the tray from potential leaks. When controlling for low sample temperature with high ambient temperature or high humidity, water condensation from the heating and cooling plate and sample tray could damage equipment under the sample tray.

Tools needed

- Diagonal cutters
- T-10 Torx driver
- T-20 Torx driver
- T-30 Torx driver

Remove the sample tray from the GC

1. Set the GC inlets, detectors, and oven to room temperature.
2. Park the sample tray by pressing the **[P]** button on the front tray panel.
3. After the GC inlets, detectors, and oven have cooled, turn off the GC and unplug the power cord.
4. Unplug the sample tray cable.
5. Unplug all injector cables.
6. Remove all vials from the injector turrets.
7. Remove all injectors from the GC inlet area. If desired, mount the injectors on any available parking posts.
8. Remove all vial racks from the sample tray.
9. Completely remove the three T-30 Torx screws securing the sample tray to the mounting bracket.
10. Carefully remove the sample tray from the GC mounting bracket.

Install the heating and cooling plate

1 Make sure the gantry is in the park position (far-left, away from the tray bracket).

2 Completely loosen the two T-20 screws securing the unknown vial station cover.

3 Remove the unknown vial station cover.

4 Completely loosen the two T-20 screws securing the unknown vial station.

5 Remove the unknown vial station.

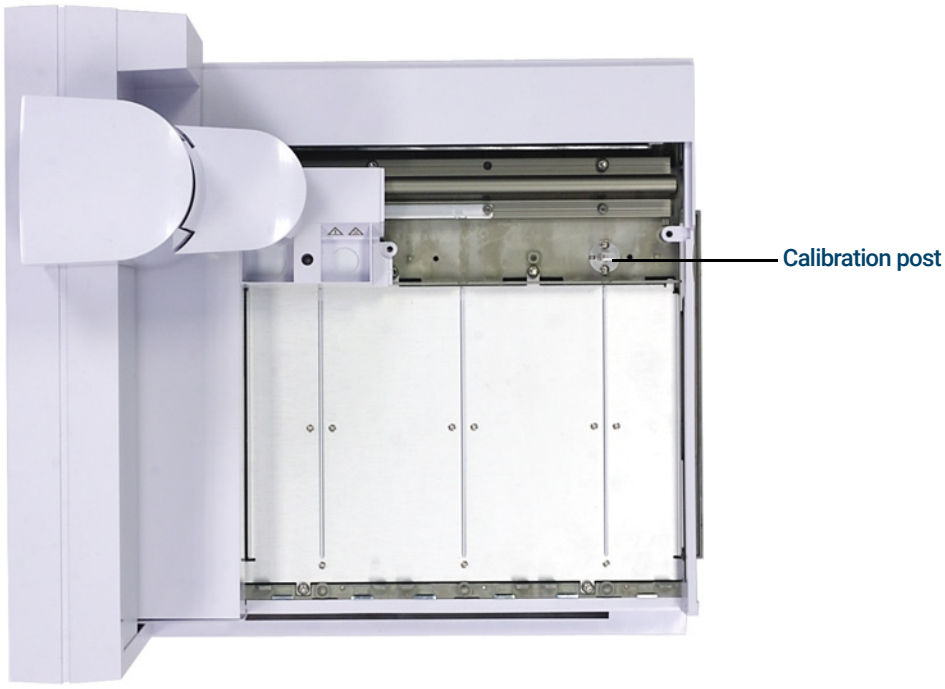

6 Slide the gantry towards the home position (far-right, towards the tray bracket).

7 Loosen the T-20 Torx screw securing the tray cover.

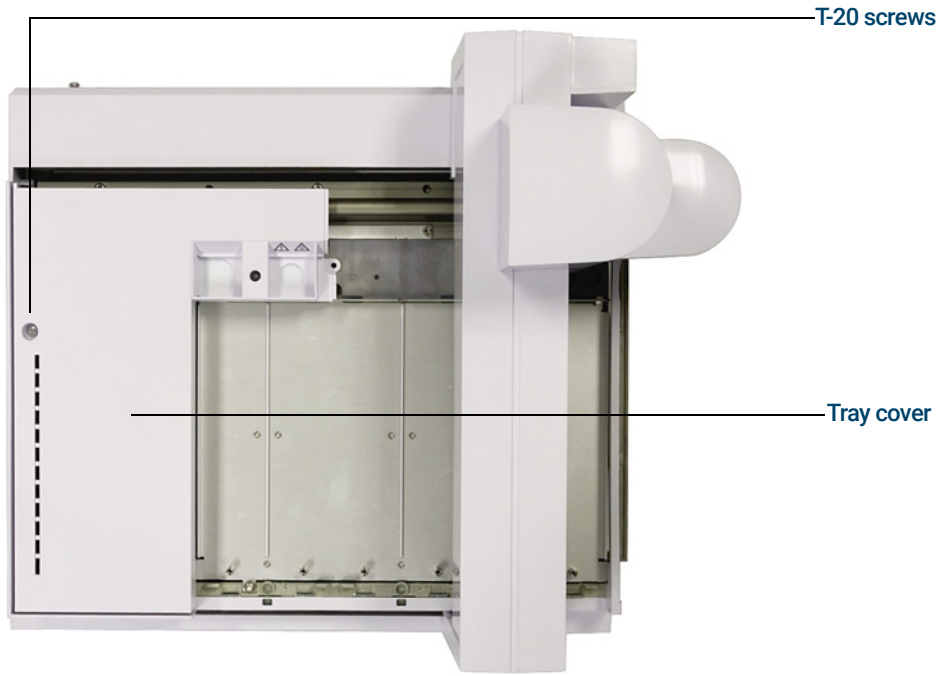

8 Remove the tray cover.

9 Slide the gantry towards the park position (far-left, away from the tray bracket).

10 Loosen and remove the four screws securing the vial rack support plate.

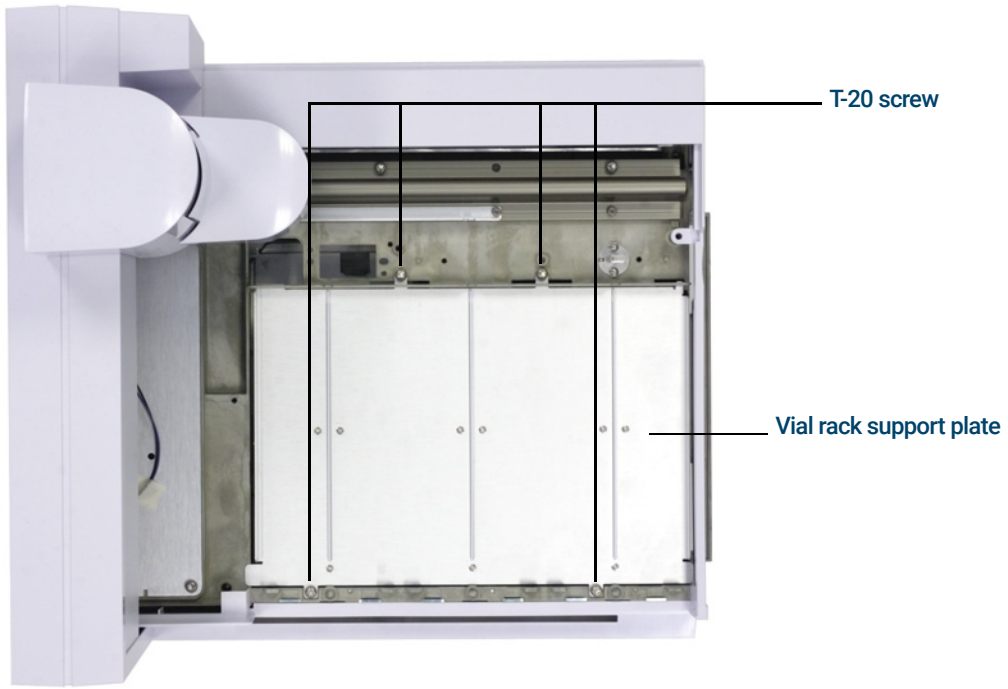

11 Remove the support plate by lifting the front of the plate and pulling outward towards the front of the sample tray. The support plate will slide out.

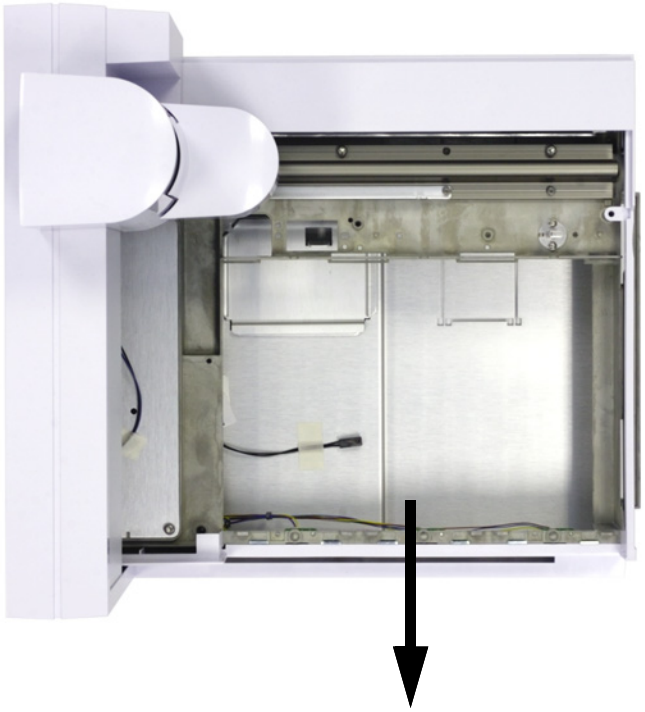

12 Place the sample tray on its back and remove the bottom access panel using a T-20 Torx driver.

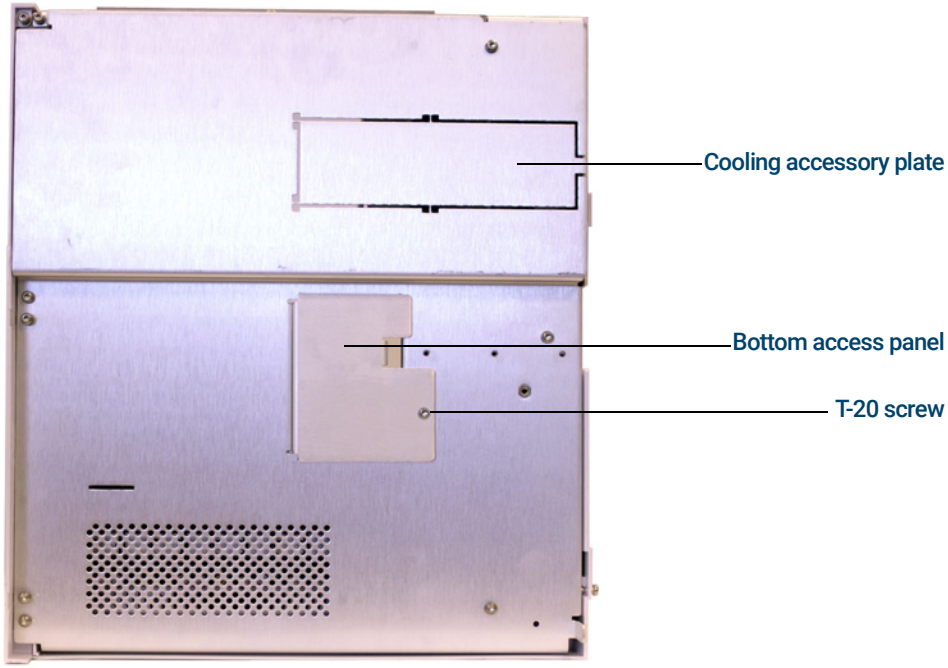

13 Using a diagonal cutter, clip the metal tabs and remove the accessory plate from the underside of the tray chassis.

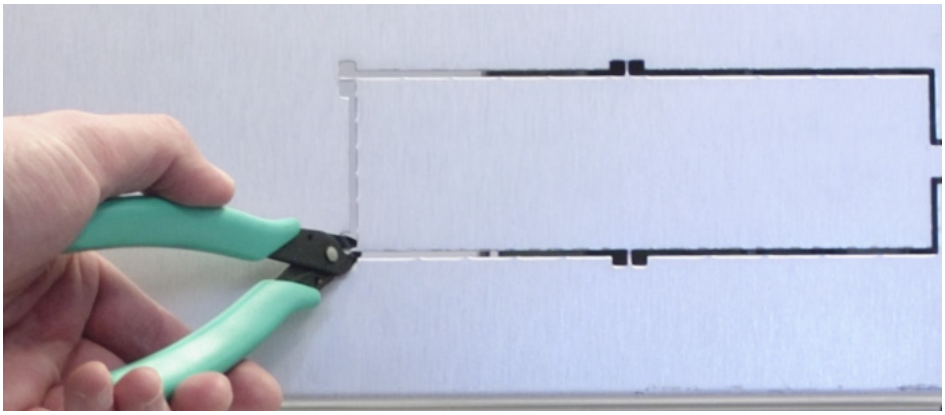

14 Place the sample tray on its base and position the heating and cooling plate partially in place, leaving room to run the heating and cooling plate cable out of the tray chassis through the bottom access opening.

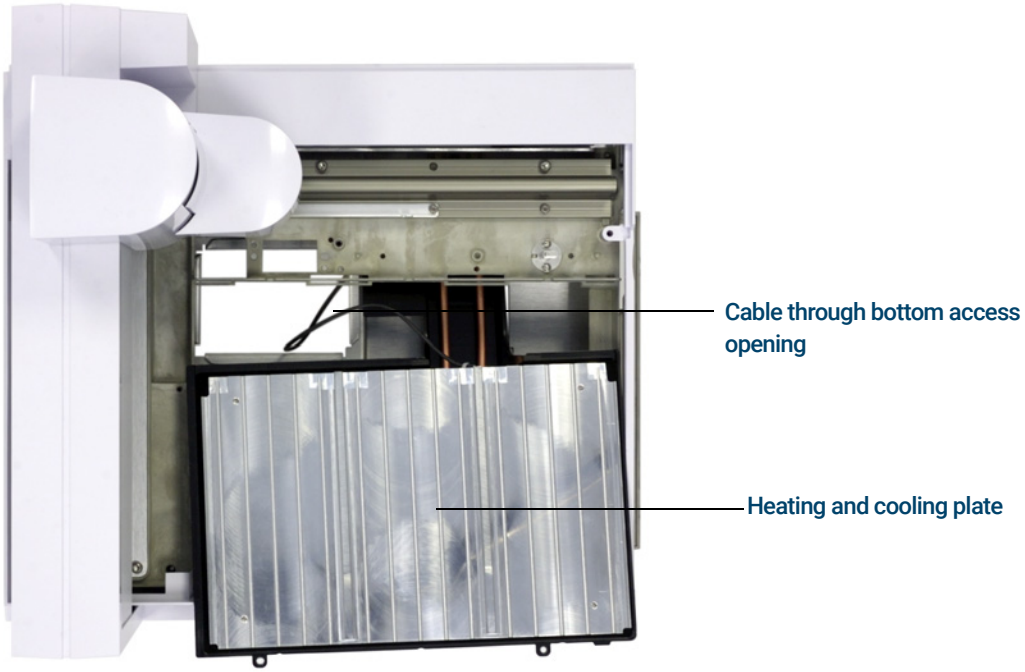

15 Once the cable is accessible through the bottom access opening, fit the heating and cooling plate in place so the top is level with the tray chassis.

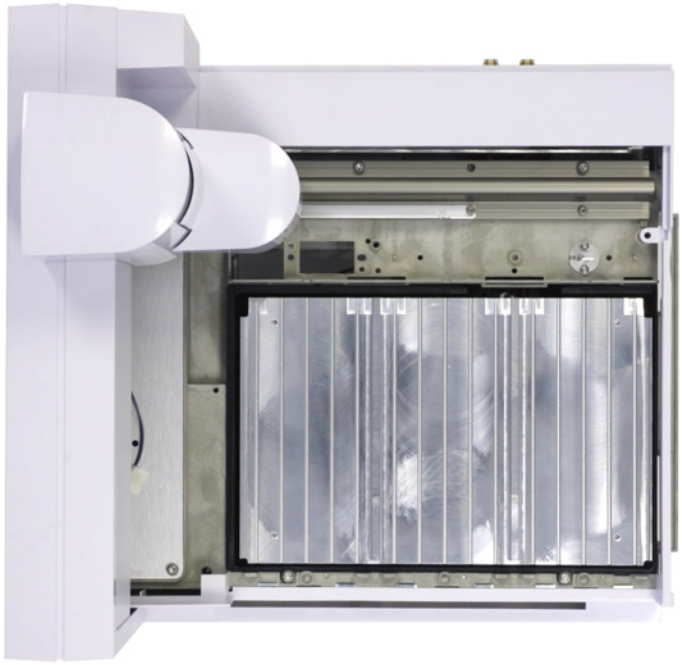

16 Secure the heating and cooling plate to the tray chassis using four screws (two in front, two in back).

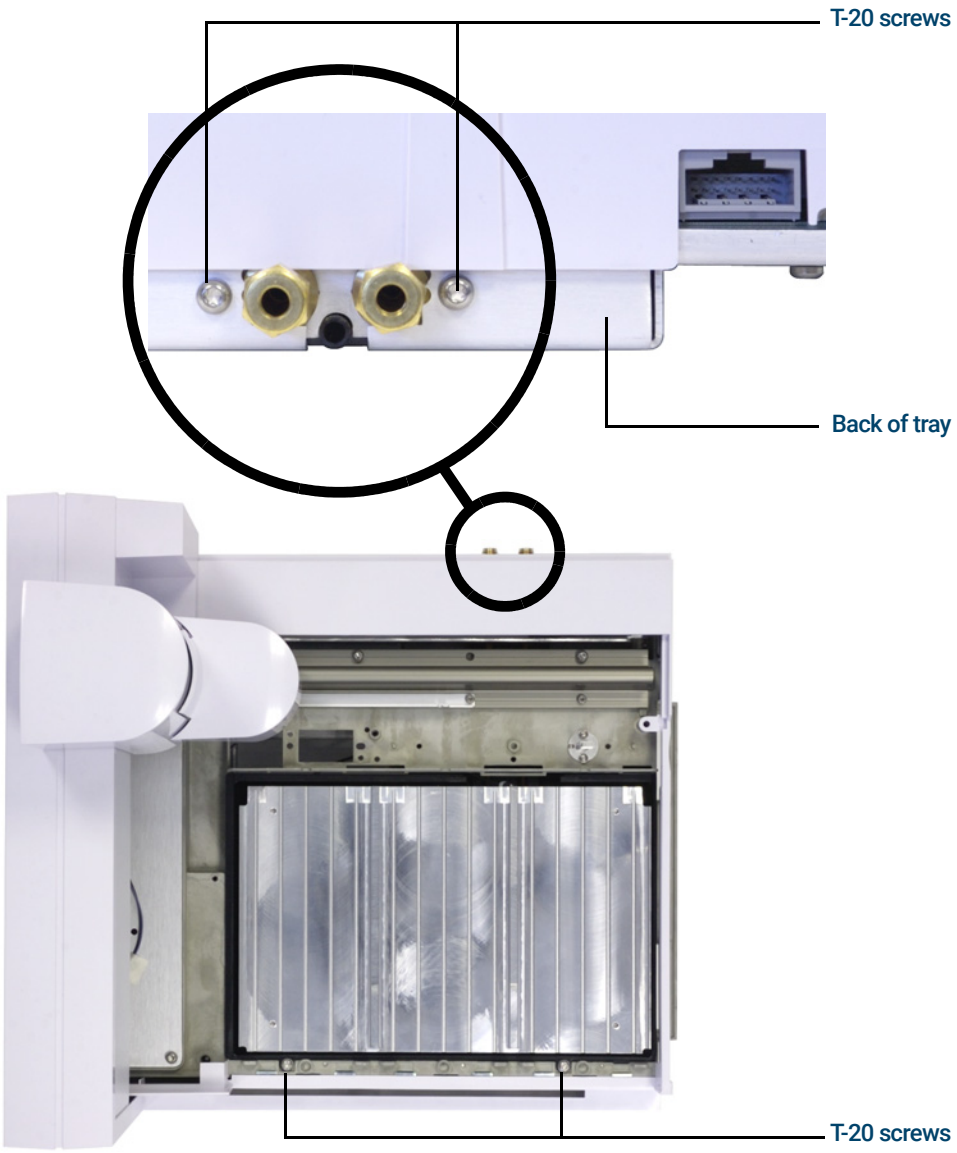

17 Place the sample tray on its back and connect the heating and cooling plate cable to the tray logic board (accessible through the bottom access opening).

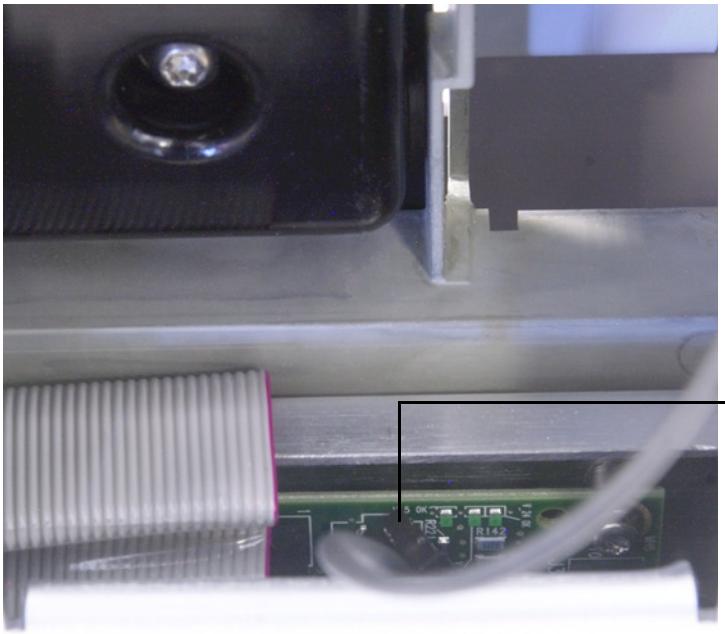

18 Reinstall the bottom access panel.

Reassemble the sample tray

1 If necessary, slide the gantry to the home position (far-right, towards the tray mount).
2 Replace the sample tray cover and secure it with a T-20 Torx screw.
3 Slide the gantry to the park position (far-left, away from the tray mount).
4 Replace the unknown vial station and secure it with two T-20 Torx screws.
5 Replace the unknown vial station cover and secure it with two T-20 Torx screws.

6 Install the heating and cooling plate vial racks. See "Installing the Vial Racks" for details.

7 Install the sample tray on the GC. See "Installing the Sample Tray" for details.

Install the drainage tubing

1 Connect the plastic tubing to the heating and cooling plate's drainage nipple on the back of the sample tray. The tubing must allow for the heating and cooling plate to drain condensate easily with no back pressure. Make sure that:

- The tubing slopes downward towards the drainage container.
- The tubing is kept straight without kinks that may block the flow.
- The open end of the tubing is not submersed in the drainage container (**Figure 40**).

- The tubing does not become clogged or dirty. Replace tubing if necessary.

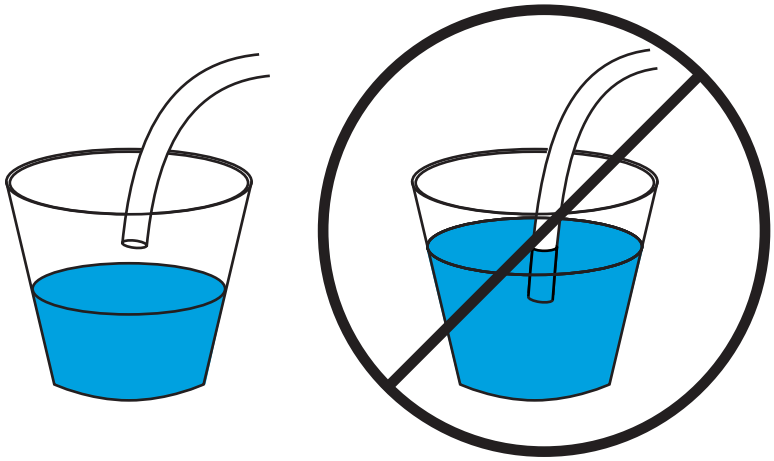

Figure 40. Drainage tube correctly hung (left) and incorrectly submersed (right)

2 Secure the tubing to the back of the heating and cooling plate using a 1/4-in Swagelok connection.

3 Check for any leaks before powering on the GC.

Complete the installation

1 Install the injectors. See "Installing the G4513A Injector" for details.

2 Connect the GC power cable, and power on the GC.

3 Calibrate the ALS system. See "Calibrating the ALS System" for details.

Coolant

Use only distilled water, ethylene glycol, or propylene glycol as coolant.

Water bath and pump specifications

CAUTION

To limit burn hazards, the heating liquids should not exceed 60 °C.

The water bath and pump system used to control the sample vial temperatures must meet the following specifications:

- The components must meet national standards for safety requirements, be suitable for unattended operation, be suitable for continuous operation, and be controllable for high-temperature protection.
- The recommended coolant temperature range is 5 to 60 °C
- If you use a built-in pump, it must be suitable for external circulation of liquid and for connection of 1/4-in od (6.35 mm) tubing or larger.

- If you use a pressure pump, it must maintain a pressure from 1.5 to 2.5 psi.
- If you use a suction pump, the pump vacuum cannot exceed –4 psi.
- Typical recirculator cooling power capacity varies from 1000 to 2000 watts.

NOTE

The temperature sensor detects the average coolant temperature in the heating and cooling plate.

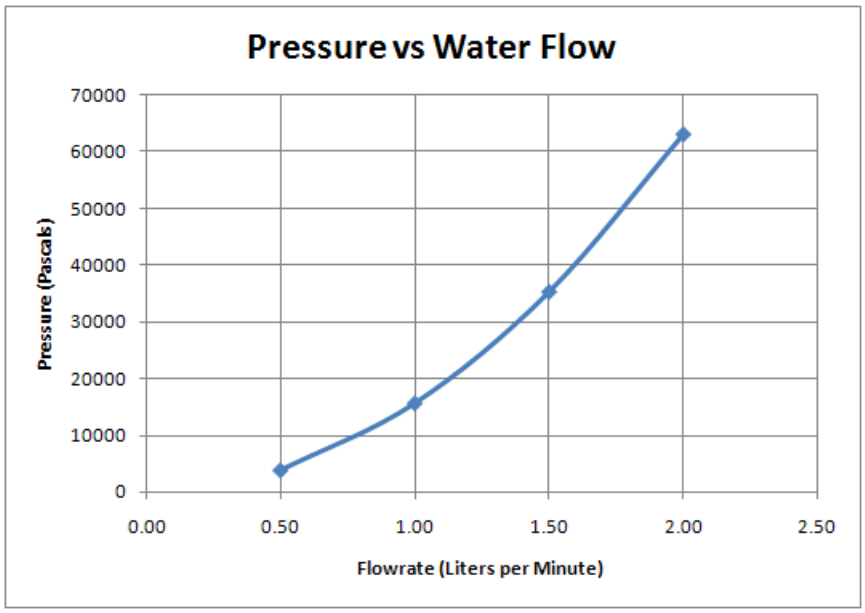

Figure 41. Pressure vs. Water Flow

Part 3: Operation

Introduction to Operation **113**

- About your 7693A Automatic Liquid Sampler **114**
- Fast Injection **118**
- Sample Carryover **120**
- Methods and Sequences **122**
- The Sampler Cycle **123**

ALS Configuration **125**

- Configuring the Injector on Other Agilent GCs **129**
- Configuring the Sample Tray on Other Agilent GCs **133**

ALS Parameters **137**

- Setting the Injector Parameters **138**
- Setting the Sample Tray Parameters **145**

Syringes and Needles **149**

- Selecting a Syringe **150**
- Inspecting a Syringe **152**
- Installing a Syringe **153**
- Removing a Syringe **156**
- Replacing a Syringe Needle **157**

Vials and Bottles **159**

- Preparing a Sample Vial **160**
- Preparing Solvent and Waste Bottles **168**
- Placing Vials and Bottles in the Turret **170**
- Using Two Injectors (8890, 7890 and 6890 Series GCs Only) **172**
- How Many Sample Vials Can I Run? **173**
- Sandwich Injections **178**

Running Samples **183**

- Running a Sample **184**
- Using the ALS Controller **185**
- Interrupting a Run or Sequence **186**
- Running a Priority Sample **187**

This page intentionally left blank.

5 Introduction to Operation

About your 7693A Automatic Liquid Sampler **114**
- Components **114**
- Features **115**
- Capabilities **116**

Fast Injection **118**

Sample Carryover **120**
- Solvent wash **120**
- Sample wash **120**
- Sample pump **120**
- Number and type of washes **120**

Methods and Sequences **122**

The Sampler Cycle **123**

This chapter describes the components that make up the Agilent 7693A ALS, some of the important features of the system, and the sampler capabilities.

About your 7693A Automatic Liquid Sampler

Components

The 7693A ALS system (**Figure 42**) can include:

- G4513A Injector module (one or two)
- G4514A Sample Tray (8890, 8860, 9000, 7890, 7820, 6890 Series GCs, and 7820 MSD)
- G4515A Bar Code Reader/Mixer/Heater (BCR)
- G4517A ALS Controller (6890A GC)
- G4516A ALS Interface Board (6890 Plus GC)
- G4520A Sample Tray with pre-installed BCR/Mixer/Heater
- G4521A Enhanced Sample Handling Syringe Carriage
- G4522A Heating and Cooling Plate
- G4525A Set of 3 colored vial rack labels
- G4526A 7693A Upgrade Kit for 6890 Series GCs

Figure 42. The 7693A ALS with 8890 Series GC and 5977 MSD

Features

The key features of the ALS system include:

- Two interchangeable sample turrets provided with the injector:
  - The standalone turret allows you to analyze up to 16 samples. It holds two solvent positions and one waste bottle position. Two sample positions can be alternately configured for sample preparation. This turret is not compatible with the sample tray.
  - The transfer turret is designed to work with the sample tray to analyze up to 150 samples. The transfer turret has three sample vial transfer locations; two of which are configurable for use in sample preparation. There are six solvent A positions, four solvent B positions, and five waste positions. This turret can be used with or without the sample tray.
- Accessible solvent and waste vial capacity of 20 mL
- Ability to run sandwich injections with up to three sample layers separated with air gaps
- A standard syringe carriage for syringes up to 100 µL
- An optional enhanced sample handling syringe carriage with a slow, high-powered motor for syringes over 100 µL
- Cool on-column injections into 250-µm, 320-µm, and 530-µm columns
- An optional BCR/Mixer/Heater module
- An optional heating and cooling plate for the sample tray
- The ability to inject different sample amounts from different sample vials
- The ability to interrupt a sequence to run priority samples, then resume the sequence
- Fast, slow, and variable plunger speeds under Agilent data system control (**Table 6** and **Table 7**)

The default values for variable plunger speeds are based on a 10 µL syringe. You should reduce the injection speed to accommodate larger syringe volumes. If you are performing a large volume injection and see a plunger error, try slowing the inject rate.

Table 6 Fast/slow plunger speed as a function of syringe volume

Plunger Speed (µL/min)	Syringe Volume (µL)									
	0.5	1	2	5	10	25	50	100	250	500
Draw (µL/min)										
Fast	15	30	60	150	300	750	1500	3000	300	600
Slow	15	30	60	150	300	750	1500	3000	300	600
Dispense (µL/min)										
Fast	300	600	1200	3000	6000	15000	30000	60000	1500	3000
Slow	300	600	1200	3000	6000	15000	30000	60000	1500	3000
Inject (µL/min)										
Fast	300	600	1200	3000	6000	15000	30000	60000		
Slow	15	30	60	150	300	750	1500	3000	75	150

Table 7 Variable plunger speed as a function of syringe volume

Variable Plunger Speed (µL/min)	Syringe Volume (µL)									
(x) = Default value	0.5	1	2	5	10	25	50	100	250	500
Sample draw	1 - 30 (15)	1 - 60 (30)	1 - 120 (60)	1 - 300 (150)	1 - 600 (300)	1 - 1500 (750)	3 - 3000 (1500)	6 - 6000 (3000)	15 - 15000 (7500)	30 - 30000 (15000)
Sample dispense	1 - 300 (300)	1 - 600 (600)	1 - 1200 (1200)	1 - 3000 (3000)	1 - 6000 (6000)	1 - 15000 (15000)	3 - 30000 (30000)	6 - 60000 (60000)	15 - 150000 (150000)	30 - 300000 (300000)
Injection dispense	1 - 300 (300)	1 - 600 (600)	1 - 1200 (1200)	1 - 3000 (3000)	1 - 6000 (6000)	1 - 15000 (15000)	3 - 30000 (30000)	6 - 60000 (60000)	15 - 150000 (150000)	30 - 300000 (300000)
Solvent draw	1 - 30 (15)	1 - 60 (30)	1 - 120 (60)	1 - 300 (150)	1 - 600 (300)	1 - 1500 (750)	3 - 3000 (1500)	6 - 6000 (3000)	15 - 15000 (7500)	30 - 30000 (15000)
Solvent dispense	1 - 300 (300)	1 - 600 (600)	1 - 1200 (1200)	1 - 3000 (3000)	1 - 6000 (6000)	1 - 15000 (15000)	3 - 30000 (30000)	6 - 60000 (60000)	15 - 150000 (150000)	30 - 300000 (300000)

Capabilities

Table 8 summarizes the capabilities of the 7693A ALS.

Table 8 ALS capabilities

Parameter	Range
Syringe size	1 to 500 µL
Wash mode	A, B A - A2, B - B2 A - A6, B - B4
Solvent saving	10%, 20%, 30%, 40%, 80% of syringe size (µL)
Injection volume	1 - 50% of syringe size (µL)
Sample pumps	0 - 15
Viscosity delay	0 - 7 seconds
Air gap	0 - 10% of syringe size (µL)
Pre-injection sample washes	0 - 15
Post-injection solvent A washes	0 - 15
Post-injection solvent B washes	0 - 15
Plunger speed	Refer to **Table 7** on page 116
Pre-injection solvent A washes	0 - 15

Table 8 ALS capabilities (continued)

Parameter	Range
Pre-injection solvent B washes	0 - 15
Pre-injection dwell	0 - 1 minutes in .01 minute
Post-injection dwell	0 - 1 minutes in .01 minute
Sampling offset	On, Off
Variable sampling depth position	0.8 mm below, 30 mm above
Multiple injection mode, number of injections	1 - 99
Multiple injection mode, injection delay time	0 - 100 seconds

Fast Injection

This is a method of introducing a sample to a heated inlet without the negative effect of needle fractionation.

If you are using the ALS for the first time, you may see some changes in the resulting chromatograms. Most of the changes are due to reducing the amount of vaporization from the needle during injection.

- The peak areas of your chromatograms may be smaller. Automatic fast injection delivers the desired setpoint volume of sample. Without fast injection, residual amounts of sample boil out of the needle and enter the inlet. This extra amount could measure up to 1 µL.
- The peak areas of your chromatograms may show less differentiation between the low boiling and high boiling components.

Without fast injection, the sample introduced is richer in low boiling component than in high boiling components because of fractional distillation in the needle. Not only does residual sample in the needle enter the inlet, but the low boiling components boil off first. This is needle fractionation or discrimination.

Figure 43 compares manual injection with automatic fast injection from the ALS for a 1-µL sample of C_{10} to C_{40} paraffins in hexane.

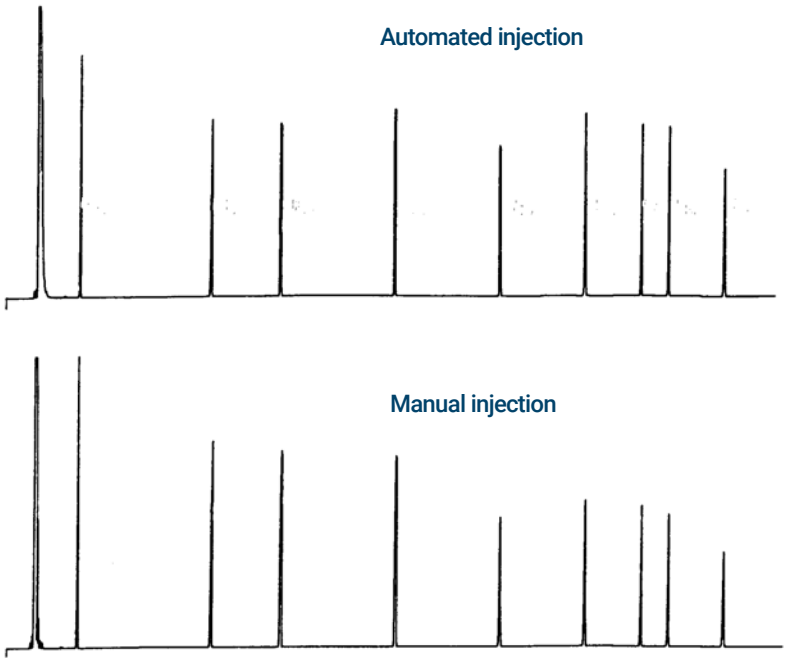

Figure 43. Automated vs. manual injection

For more information on the performance of the ALS, order the following technical papers from your Agilent representative:

Publication No. 43-5953-1843:Snyder, W.Dale. Fast Injection with the 7673A Automatic Injector: Chemical Performance, Technical Paper 108, June 1985.

Publication No. 43-5953-1878:Snyder, W.Dale. Performance Advantage of the 7673A Automatic Injector Over Manual Injection, Technical Paper 109, August 1985.

Publication No. 43-5953-1879:Kolloff, R.H.C.Toney, and J.Butler. Automated On-Column Injection with Agilent 7673A Automatic Injector and 19245A On-Column Capillary Inlet: Accuracy and Precision, Technical Paper 110, August 1985.

Sample Carryover

Carryover is the presence of peaks from an earlier injection in the present analysis.

The injector uses solvent washes, sample washes, and sample pumps to control carryover. Each of these actions reduces the amount of sample left in the syringe. The effectiveness of each depends on your application.

Solvent wash

The injector draws solvent into the syringe from either the solvent A positions or solvent B positions, then discards the syringe contents into one or more waste bottles. Solvent washes can occur before taking a sample (pre-injection solvent wash) or immediately after the injection (post-injection solvent wash). The volume of the wash can be adjusted.

Sample wash

During a sample wash, the injector draws the next sample into the syringe and discards the contents into one or more waste bottles. Sample washes occur before the injection. When sample is limited, you can use a solvent prewash to wet the syringe before drawing sample. The volume of the wash can be adjusted.

Sample pump

During a sample pump, the injector draws sample into the syringe and returns it to the sample vial. Pumps occur after sample washes and immediately before the injection. Pumps serve to eliminate bubbles. If the needle contains solvent from a previous wash, the pump may add a small amount of solvent that mixes with the sample and can dilute a small volume.

Number and type of washes

Under ideal conditions, four default volume (80%) washes reduce the carryover to one part in 10,000. The number and type of washes you need depends on:

- The amount of carryover that you can accept
- The viscosity and solubility of the analyte(s)
- The viscosity and volatility of the solvent(s)
- The degree of wear in the syringe barrel
- The wash volume

Chromatograms A and B (**Figure 44**) show the effect of carryover when 1 µL from a vial of methanol is injected after 1 µL from a vial of a solute dissolved in methanol. The peaks in chromatogram B are from the solute left in the syringe from the first injection.

Chromatogram C shows the result of washing the syringe with four 80% syringe volume solvent washes. The carryover peaks disappear.

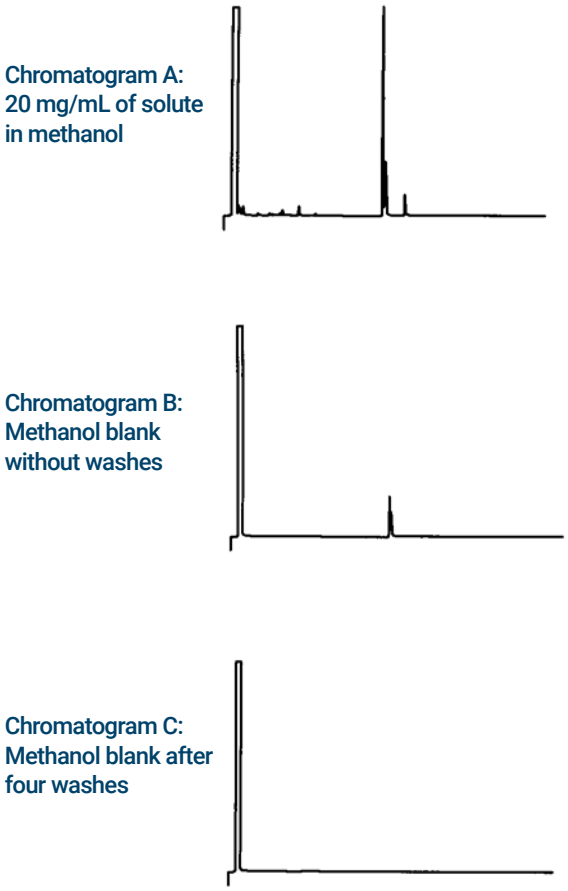

Figure 44. Sample carryover

Methods and Sequences

The sampler is usually controlled by a sequence, which is a list of samples to be analyzed. It contains:

- Where to find the sample
- What method to use to analyze the sample
- How to measure and inject the sample
- How to generate a report of analysis

A method is a collection of setpoints (temperatures, times, etc.) that controls the operation of a gas chromatograph.

The combination of a sequence and the methods it specifies provides complete control over the analysis of your samples. However, the specific details differ depending on the hardware and software used, so you are referred to other documents for that information.

This discussion is limited to sampler-specific details. For setting up methods and sequences see your Agilent data system help or GC documentation.

The Sampler Cycle

All versions of the ALS perform the same basic operations (**Table 9**).

Table 9 Sampler cycle

Step	Action	Notes
1 Transport the sample vial.	• If necessary, move the sample vial from the tray to the turret.	
2 Wash the syringe with solvent.	**a** Rotate a solvent bottle under the syringe. **b** Lower the syringe needle into the solvent. **c** Draw in solvent. **d** Raise the syringe needle out of the solvent bottle. **e** Rotate a waste bottle under the syringe. **f** Lower the syringe. Depress the plunger to discard solvent. **g** Raise the syringe needle out of the waste vial.	• The syringe can be washed several times and with more than one solvent. This is controlled by the solvent pre-wash parameters.
3 Wash the syringe with sample.	**a** Rotate the sample vial under the syringe. **b** Lower the syringe needle so that the needle pierces the vial septum and enters the sample. **c** Draw in sample. **d** Raise the syringe and needle out of the solvent bottle. **e** Rotate a waste bottle under the syringe. **f** Lower the syringe needle. Depress the plunger to discard sample. **g** Raise the syringe needle out of the waste vial.	• The syringe can be rinsed with sample several times.
4 Load the syringe with sample.	**a** Rotate the sample vial under the syringe. **b** Lower the syringe needle so that it pierces the vial septum. **c** Draw in sample. **d** With the needle still in the sample, depress the syringe plunger quickly. **e** After the final pump, draw in sample. **f** Raise the syringe needle out of the sample vial.	• Actions **c** and **d** can be repeated several times. The purpose is to expel air bubbles from the syringe.
5 Inject the sample.	**a** Rotate the turret to expose the GC inlet. **b** Lower the syringe needle so that it pierces the inlet septum. **c** Depress the syringe plunger to make the injection. **d** Raise the syringe needle out of the GC inlet.	• **Start** signals are sent to the GC and the data processor at the moment of injection.
6 Wash the syringe with solvent.	• Same as **step 2**, but according to the post-injection parameters.	
7 Transport the sample vial.	• Return the sample vial to its initial turret or tray location.	

Table 9 Sampler cycle (continued)

Step	Action	Notes
Perform repeat injections.	• If so programmed, wait for the GC to become Ready and repeat the cycle from **step 1**.	

6 ALS Configuration

Configuring the ALS on an 8890, 9000, or 8860 GC **126**

Configuring the Injector on Other Agilent GCs **129**

- 7890 Series GC, 7820A GC, and 7820 MSD **129**
- 6890 Series GC **130**
- 6850 Series GC **131**
- 5975T LTM-GC/MSD **132**

Configuring the Sample Tray on Other Agilent GCs **133**

- 7890 Series GC, 7820 GC, and 7820 MSD **133**
- 6890 Series GC **134**

This chapter describes how to configure the ALS using different controlling devices.

The descriptions in this chapter refer to the features available with the GC firmware and does not necessarily describe the capabilities available with Agilent data systems. Refer to Agilent data system online help.

Configuring the ALS on an 8890, 9000, or 8860 GC

For a 8890 GC or 9000 GC, on the GC touchscreen go to **(Settings) > Configuration > ALS/Tray**. For the 8860, connect to the GC using the Browser Interface and go to **Method > Configuration > ALS/Tray**. (For 8860, configure the ALS in each method.)

Configure each injector as needed. If a tray is present, select its tab and configure as needed. (The images below show the 8890/9000 GC touchscreen. The browser interface is similar for 8890, 8860, and 9000 GCs.)

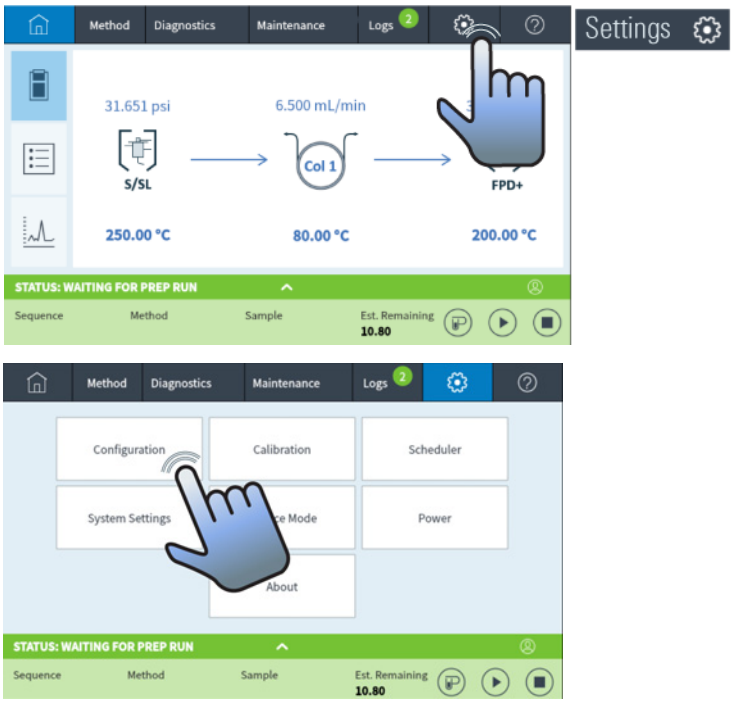

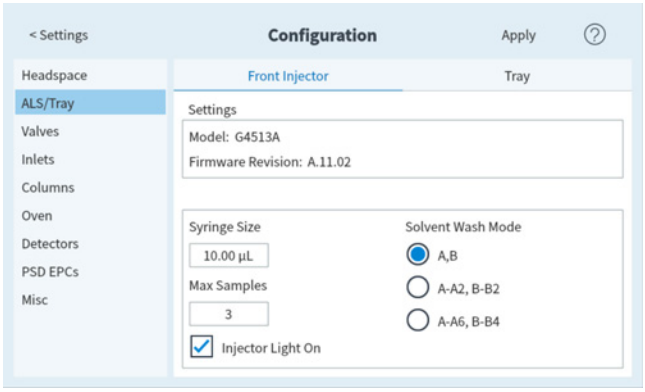

Injector settings

`Syringe size` — Enter a syringe size between 0.5 and 500 µL.

NOTE

The GC assumes the syringe volume represents full plunger stroke. If the maximum volume marked on the syringe barrel is halfway up the barrel, you will need to enter double that volume (the label in this case is half of the full plunger stroke).

`Solvent Wash Mode` — Available choices depend on whether the injector has a transfer turret installed.

`A-A6, B-B4` — Uses all 6 solvent A bottles if injector uses solvent A washes. Uses all 4 solvent B bottles if injector uses solvent B washes. The injector alternates between all bottles.

A-A2, B-B2—Uses solvent bottles A and A2 if injector uses solvent A washes and solvent bottles B and B2 if injector uses solvent B washes. The injector alternates between all bottles.

A,B—Uses solvent bottle A if injector uses solvent A washes and solvent bottle B if injector uses solvent B washes.

The injector always uses both WA waste bottles if a solvent A wash is used and both WB waste bottles if a solvent B wash is used.

`Injector Light On` — Enable to turn on the injector interior light at all times.

Tray settings

Tray Chiller/Heater — 8890 only. If installed and enabled, set the following parameters for the optional tray chiller/heater:

`Enable readiness check` — Enable or disable the readiness check. When enabled, the GC checks the actual tray temperature against the Chiller Error Band value. If the actual temperature falls within the error band, then the GC is considered ready.

`Target Temperature` — Set the desired tray temperature.

`Actual` — The current tray temperature reading.

`Chiller Error Band` — Set the allowable error band for the chiller temperature to be considered ready by the readiness check feature. If the actual tray temperature falls outside of the Chiller Error Band value, the GC will be considered not ready.

`Barcode Reader Symbologies` — If your ALS system has a bar code reader installed, configure the bar code reader symbologies.

`Enable all symbologies` — Offers the greatest versatility for laboratory use. It can encode both letters and numbers, plus a few punctuation marks, and message length can be varied to suit both the amount of data to be encoded and the space available.

`Enable 3 of 9` — the 3 of 9 setting can encode both letters and numbers, plus a few punctuation marks, and message length can be varied to suit both the amount of data to be encoded and the space available.

`Enable Code 128` — the code 128 setting is used extensively worldwide. It offers a full ASCII 128 symbol set with very dense code. The total character set (14 if alphanumeric, 28 if numeric with starting code C) includes a checksum digit.

`Enable Matrix 2 of 5` — an older, numeric-only code.

`Enable Standard 2 of 5` — often used in airline ticket marking and photo finishing.

`Enable Interleaved 2 of 5` — the 2 of 5 code is restricted to numbers but does allow variable message length.

`Enable UPC-A` — the Universal Product Code (UPC) is probably the most well-known code in use today. UPC-A codes are 12 numbers (1 number system, 10 data and 1 checksum) and have fixed message length.

`Enable EAN/JAN 13` — the EAN/JAN 13 code offers 13 numbers (2 country, 10 data, 1 checksum).

`Enable EAN/JAN 8` — the EAN/JAN 8 code offers 8 numbers (2 country, 5 data, 1 checksum).

`Enable UPC-E` — the Universal Product Code (UPC) is probably the most well-known code in use today. UPC-E codes are 6 numbers (6 data) and have fixed message length.

`Enable barcode checksum` — Select to enable checksum verification.

`Vial heater offset` — If you have manually calibrated the temperature of vials in the bar code reader/heater, enter the offset value here.

Configuring the Injector on Other Agilent GCs

7890 Series GC, 7820A GC, and 7820 MSD

For a 7890 Series GC, press **[Config] [Front Injector]** or **[Config] [Back Injector]** on the GC keypad to display the front or back injector configuration parameters. For a 7820A GC or 7820 MSD, press **[Config] [Injector]** on the GC software keypad to display the front or back injector configuration parameters.

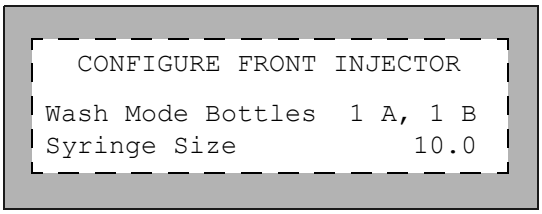

`Wash Mode Bottles`— This is only displayed when the injector has a transfer turret installed. On a 7890 Series GC the turret solvent bottle positions are selected using the **[Mode/Type]** key:

`6-A and 4-B Washes`—Uses all 6 solvent A bottles if injector uses solvent A washes. Uses all 4 solvent B bottles if injector uses solvent B washes. The injector alternates between all bottles.

`2-A and 2-B Washes`—Uses solvent bottles A and A2 if injector uses solvent A washes and solvent bottles B and B2 if injector uses solvent B washes. The injector alternates between all bottles.

`1-A and 1-B Washes`—Uses solvent bottle A if injector uses solvent A washes and solvent bottle B if injector uses solvent B washes.

The injector always uses both WA waste bottles if a solvent A wash is used and both WB waste bottles if a solvent B wash is used.

`Syringe size`— Enter a syringe size between 0.5 and 500 µL.

NOTE

The GC assumes the syringe volume represents full plunger stroke. If the maximum volume marked on the syringe barrel is halfway up the barrel, you will need to enter double that volume (the label in this case is half of the full plunger stroke).

6890 Series GC

Press **[Config] [Front Injector]** or **[Config] [Back Injector]** to display the parameters.

Scroll to the desired parameter detailed below.

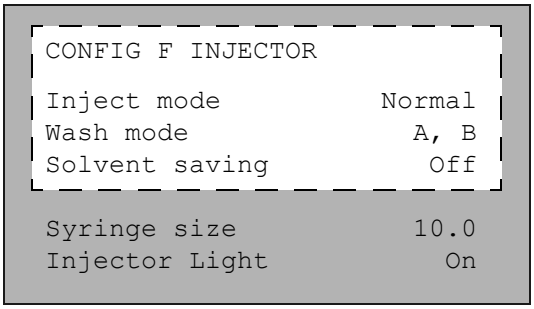

`Inject mode` — Select the injection mode type that is installed on your injector. On a 6890N GC the injection mode is selected using the **[Mode/Type]** key:

`Normal` – Injects a single sample.

`Sample + L2` – Injects a mixture of two samples separated by an air gap.

`Sample + L2 + L3` – Injects a mixture of three samples separated by air gaps.

`Large Volume`-Injects sample using a 250 or 500 µL syringe.

`Wash mode`— This is only displayed when the injector has a transfer turret installed. On a 6890N GC the turret solvent bottle positions are selected using the **[Mode/Type]** key:

`Wash using A, B` — Uses solvent bottle A if injector uses solvent A washes and solvent bottle B if injector uses solvent B washes.

`Use A-A2, B-B2` — Uses solvent bottles A and A2 if injector uses solvent A washes and solvent bottles B and B2 if injector uses solvent B washes. The injector alternates between both bottles.

`Use All A, B` — Uses all 6 solvent A bottles if injector uses solvent A washes. Uses all 4 solvent B bottles if injector uses solvent B washes. The injector alternates between all bottles.

For a 6890A or 6890 Plus GC, the wash mode is controlled by scrolling through the options using the **[On]** key, or entering a value of:

- 1 for using solvent bottle A if injector uses solvent A washes and solvent bottle B if injector uses solvent B washes.
- 2 for using solvent bottles A and A2 if injector uses solvent A washes and solvent bottles B and B2 if injector uses solvent B washes. The injector alternates between all bottles.
- 3 for using all solvent A bottles if injector uses solvent A washes and all solvent B bottles if injector uses solvent B washes. The injector alternates between all bottles.

The injector always uses both WA waste bottles if a solvent A wash is used and both WB waste bottles if a solvent B wash is used.

`Solvent Saving` — Use this option to vary the syringe wash amount from about 10% to 80% of syringe volume. This setting reduces the amount of solvent and sample consumed during each injection cycle. See **"Sample Carryover"** on page 120 for more information.

On a 6890N, the wash amount is selected using the **[Mode/Type]** key. This brings up a selection of actual wash volumes based on the volume of the syringe used. Select Off to disable solvent saving option.

For a 6890A or 6890 Plus, these settings are controlled by scrolling through the options using the **[On]** key, or entering a setpoint value of:

- 0 to disable the solvent saving feature resulting in a wash volume equal to 80% of syringe volume.
- 1 for 10% of syringe volume wash
- 2 for 20% of syringe volume wash
- 3 for 30% of syringe volume wash
- 4 for 40% of syringe volume wash

`Syringe size`—Enter a syringe size between 0.5 and 500 µL.

NOTE

The GC assumes the syringe volume represents full plunger stroke. If the maximum volume marked on the syringe barrel is halfway up the barrel, you will need to enter double that volume (the label in this case is half of the full plunger stroke).

`Injector Light`—Control the LED light (On, Off) inside the injection tower.

6850 Series GC

Use your Agilent data system to configure the injector for use.

`Inject mode` — Select the injection mode.

`Normal`-Injects a single sample (including large volume injections with only one septum puncture).

`Sample + L2` – Injects a mixture of two samples separated by an air gap.

`Sample + L2 + L3` – Injects a mixture of three samples separated by air gaps.

`Large Volume`-Performs large volume injections using multiple septum punctures (multiple injections per run).

`Wash mode` — This is only displayed when the injector has a transfer turret installed.

`Wash using A, B` — Uses solvent bottle A if injector uses solvent A washes and solvent bottle B if injector uses solvent B washes.

`Use A-A2, B-B2` — Uses solvent bottles A and A2 if injector uses solvent A washes and solvent bottles B and B2 if injector uses solvent B washes. The injector alternates between both bottles.

`Use All A, B` — Uses all 6 solvent A bottles if injector uses solvent A washes. Uses all 4 solvent B bottles if injector uses solvent B washes. The injector alternates between all bottles.

`Solvent Saving` — Use this option to vary the syringe wash amount from about 10% to 80% of syringe volume. This setting reduces the amount of solvent and sample consumed during each injection cycle. See **"Sample Carryover"** on page 120 for more information.

`Syringe size` — Enter a syringe size between 1 and 500 µL.

NOTE

The GC assumes the syringe volume represents full plunger stroke. If the maximum volume marked on the syringe barrel is halfway up the barrel, you will need to enter double that volume (the label in this case is half of the full plunger stroke).

`Injector Light` — Control the LED light (On, Off) inside the injection tower.

5975T LTM-GC/MSD

Configure the injector using your Agilent data system. Refer to your data system help for details.

Configuring the Sample Tray on Other Agilent GCs

7890 Series GC, 7820 GC, and 7820 MSD

The sample tray delivers sample vials to the front and rear injectors according to the defined sequence parameters. There is a separate set of sequence parameters for each injector. The sample tray delivers vials to the front injector before the rear injector. Stored sequences and bar code configurations can be used to tell the sample tray where to deliver and retrieve sample vials.

For the 7890 Series GC, press **[Config] [Sample Tray]** to access the sample tray and Bar Code Reader setpoints. For the 7820 GC and 7820 MSD, press **[Config] [Sample Tray]** on the GC software keypad to display the sample tray configuration parameters

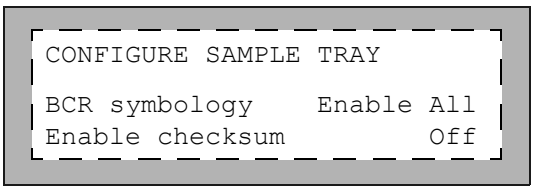

To edit the sample tray BCR symbology configuration, press **[Config] [Sample Tray] > BCR Symbology > [Mode/Status]**.

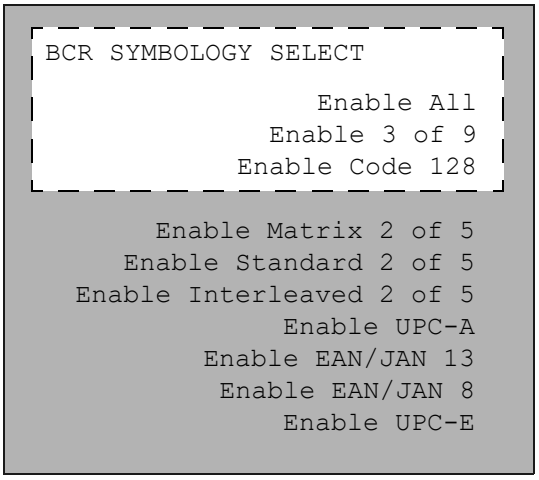

Press **[Info]** to view the possible values to enter.

`BCR Symbology` – Select one of the following bar code setpoints.

`Enable All` — The Enable All setting offers the greatest versatility for laboratory use. It can encode both letters and numbers, plus a few punctuation marks, and message length can be varied to suit both the amount of data to be encoded and the space available.

`Enable 3 of 9` — The 3 of 9 setting can encode both letters and numbers, plus a few punctuation marks, and message length can be varied to suit both the amount of data to be encoded and the space available.

`Enable Code 128` — The code 128 setting is used extensively worldwide. It offers a full ASCII 128 symbol set with very dense code. The total character set (14 if alphanumeric, 28 if numeric with starting code C) includes a checksum digit.

`Enable Interleaved 2 of 5` — The 2 of 5 code is restricted to numbers but does allow variable message length.

`Enable UPC-A` — The Universal Product Code (UPC) is probably the most well-known code in use today. UPC-A codes are 12 numbers (1 number system, 10 data and 1 checksum) and have fixed message length.

`Enable UPC-E` — The Universal Product Code (UPC) is probably the most well-known code in use today. UPC-E codes are 6 numbers (6 data) and have fixed message length.

`Enable EAN/JAN 13` — The EAN/JAN 13 code offers 13 numbers (2 country, 10 data, 1 checksum).

`Enable EAN/JAN 8` — The EAN/JAN 8 code offers 8 numbers (2 country, 5 data, 1 checksum).

For more information on the Bar Code Reader, see **"G4515A Bar Code Reader/Mixer/Heater"** on page 26, **"Installing the G4515A Bar Code Reader/Mixer/Heater"** on page 91, or its Operating Manual.

`Enable checksum`-Select one of the following checksum setpoints.

`OFF` – Disables the BCR checksum.

`ON` – Enables BCR checksum for 3 of 9 and 2 of 5.

`Enable Tray Chiller` – If installed, enable or disable the heating and cooling plate temperature by turning it On or Off.

`Tray Chiller Temp` – If installed, the current heating and cooling plate temperature is displayed. Sets the target heating and cooling plate temperature.

`Tray Chiller Error-band` – If installed, set the allowable readiness of detection of the temperature error band for the heating and cooling plate temperature before it is declared not ready.

6890 Series GC

The sample tray delivers sample vials to the front and rear injectors according to the defined sequence parameters. There are a separate set of sequence parameters for each injector. The sample tray delivers vials to the front injector before the rear injector. Stored sequences and bar code configurations can be used to tell the sample tray where to deliver and retrieve sample vials.

Press **[Config] [Sample Tray]** to access the sample tray, Bar Code Reader, and heating and cooling plate setpoints.

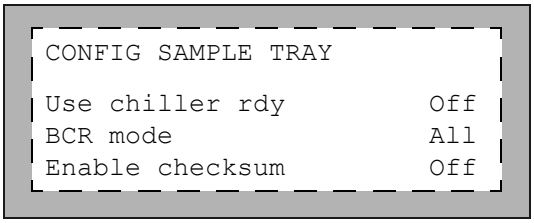

To edit the sample tray BCR symbology mode, press **[Config] [Sample Tray] > BCR mode > [Mode/Status]**.

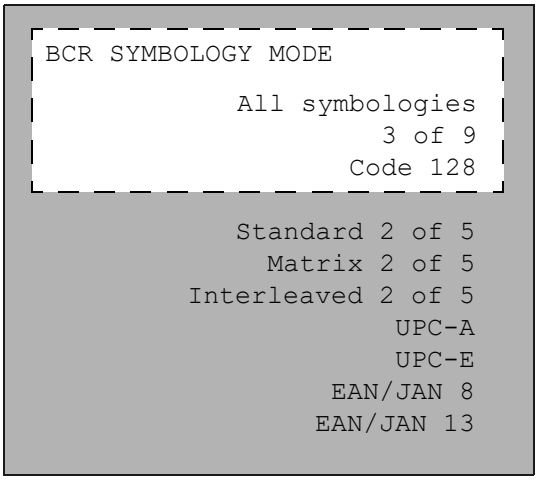

Press **[Info]** to view the possible values to enter.

`Use chiller rdy` — If installed, enable or disable detection of the heating and cooling plate temperature readiness. This feature is only available for the 6890N GC.

For 6890A and 6890 Plus GCs, the chiller/heater temperature must be manually monitored to determine readiness before running samples.

> `Chiller err band` — If the heating and cooling plate readiness detection is enabled, set the allowable error band for the heating and cooling plate temperature before it is declared not ready.

`BCR mode` – Select one of the following bar code setpoints.

`All symbologies` — The All symbologies setting offers the greatest versatility for laboratory use. It can encode both letters and numbers, plus a few punctuation marks, and message length can be varied to suit both the amount of data to be encoded and the space available.

`3 of 9` — The 3 of 9 setting can encode both letters and numbers, plus a few punctuation marks, and message length can be varied to suit both the amount of data to be encoded and the space available.

`Code 128` — The code 128 setting is used extensively worldwide. It offers a full ASCII 128 symbol set with very dense code. The total character set (14 if alphanumeric, 28 if numeric with starting code C) includes a checksum digit.

`Interleaved 2 of 5` — The 2 of 5 code is restricted to numbers but does allow variable message length.

`UPC-A` — The Universal Product Code (UPC) is probably the most well-known code in use today. UPC-A codes are 12 numbers (1 number system, 10 data and 1 checksum) and have fixed message length.

`UPC-E` — The Universal Product Code (UPC) is probably the most well-known code in use today. UPC-E codes are 6 numbers (6 data) and have fixed message length.

`EAN/JAN 8` — The EAN/JAN 8 code offers 8 numbers (2 country, 5 data, 1 checksum).

`EAN/JAN 13`— The EAN/JAN 13 code offers 13 numbers (2 country, 10 data, 1 checksum).

For more information on the Bar Code Reader, see **"G4515A Bar Code Reader/Mixer/Heater"** on page 26, **"Installing the G4515A Bar Code Reader/Mixer/Heater"** on page 91, or its Operating Manual.

`Enable checksum` – Enable or disable the checksum feature (On, Off).

7 ALS Parameters

Setting the Injector Parameters 138
- 8890, 8860, and Intuvo 9000 GCs 138
- 7890 Series GC, 7820A GC, and 7820 MSD 141
- 6890 Series GC 143
- 6850 Series GC 144
- 5975T LTM-GC/MSD 144

Setting the Sample Tray Parameters 145
- 8890, 8860, and Intuvo 9000 GCs 145
- 7890 Series GC, 7820 GC, and 7820 MSD 145
- 6890 Series GC 146

This chapter describes how to set the automatic liquid sampler parameters using different controlling devices.

The descriptions in this chapter refer to the features available with the GC firmware and does not necessarily describe the capabilities available with Agilent data systems. Refer to Agilent data system online help.

Setting the Injector Parameters

The available parameters depend on the specific configuration of your GC and injector. Refer to **Table 8** on page 116 and **Table 7** on page 116 for ALS system capabilities.

8890, 8860, and Intuvo 9000 GCs

On the GC touchscreen or in the Browser Interface, go to **Method > ALS/Tray**, then select the desired injector tab.

Injection

Syringe

`Syringe Size` — This field displays the configured size of the installed syringe.

`Injection Volume` — Select the injection volume (in uL) from the drop-down list. The amounts listed depend on configured syringe size.

Dwell Time

These parameters are used to set the time the syringe needle will remain in the inlet.

`Pre-Injection` — Time the syringe needle will remain in the inlet before the injection stroke.

`Post-Injection` — Time the syringe needle will remain in the inlet after the injection stroke.

Multiple Injections

`Number of injections` — Number of injections by each syringe.

`Injection delay` — Time between each injection.

Sample Depth

This option sets the depth (mm) that the syringe needle tip drops into the sample vial, as measured from the vial's bottom. Select the **Enable** checkbox to use this function, then enter the desired value in the field provided.

A value of zero is the standard (default) setpoint position. Sampling depth values entered here are defined relative to the standard position, so a negative entry lowers the needle and a positive entry raises it. The default sampling depth is usually acceptable for standard 2-mL sample vials. However, if using vial inserts or non-standard vials, you may need to adjust the depth. See **"Setting the Sampling Depth in the Method"** on page 167.

Washes and Pumps

These parameters are used to set washes and pumps to prepare the syringe for injection.

`Solvent A` — These fields allow you to set the number of times the syringe is rinsed with Solvent A before (Pre-Injection) and/or after (Post-Injection) an injection as well as the Volume of each solvent wash. The Max setting is 80% of full syringe volume.

`Solvent B` — These fields allow you to set the number of times the syringe is rinsed with Solvent B before (Pre-Injection) and/or after (Post-Injection) an injection as well as the Volume of each solvent wash. The Max setting is 80% of full syringe volume.

Sample:

`Washes` — Allows you to set the number of times the syringe is rinsed with Sample after any solvent washes and before the sample injection.

`Volume` — % of syringe size of each syringe. The Max setting is 80% of full syringe volume.

`Pumps` — This field allows you to set the number of times, prior to sample injection, that the syringe is filled with sample, then emptied back into the sample vial. Pumping expels air bubbles which improves reproducibility.

Note that wash behavior varies depending on syringe size:

- For 100-uL and smaller syringes, the sampler draws the solvent volume specified in the Volume field. After the needle leaves the wash solvent, the injector draws the plunger up until the solvent slug rinses 80% of the syringe volume, then dispenses to waste.
- For 250-uL and larger syringes, the injector draws and dispenses the exact wash volume of solvent specified in the Volume field. The injector rinses only the volume specified.

Speeds

Plunger

Select the plunger speed, Fast, Slow, or Variable, as available for the installed injector. Note that the actual Draw, Dispense, and Inject rates depend upon the size of the installed syringe. Variable plunger speed is always available for both single and multiple injections.

`Fast` — The Draw, Dispense, and Inject rates (uL/min) are determined by your injector specifications and are shown as display only (grayed out) in this panel.

`Slow` — The Inject rate is slow, while Draw and Dispense rates remain fast. The Draw, Dispense, and Inject rates (uL/min) are determined by your injector specifications and are shown as display only (grayed out) in this panel.

`Variable` — This option, usually used for MMI or PTV large-volume, single-injection analysis, allows you to select from a wide range of solvent and sample draw, dispense, and inject rates. Note that the software rounds the entered value to the nearest value allowed by the injector. The default values for this option are based on a 10 µL syringe, and you should reduce the injection speed to accommodate larger volume syringes.

Solvent Wash

`Draw` — Rate at which sample is drawn into the syringe.

`Dispense` — Rate at which liquid is expelled from the syringe during a wash or pump cycle.

Sample Wash

`Draw` — Rate at which sample is drawn into the syringe.

`Dispense` — Rate at which liquid is expelled from the syringe during a wash or pump cycle

Injection

`Viscosity Delay` — This option allows you to set the number of seconds (0 – 7 seconds) the syringe plunger pauses between the last pumping stroke and the injection stroke. For viscous samples, this delay allows the sample additional time to flow into vacuum created inside the syringe during the pumping stroke.

Injection Type

If available, select the injection type and enter the appropriate values. The sampler and GC firmware determine the injection types available.

Draw Locations:

L1	"Layer 1" always drawn from the active sample vial.
L2	"Layer 2" drawn from: • Position 2 in a 3-vial transport turret • Position 15 in a 16-vial standalone turret • Position 24 for L1 samples 1-23 and position 49 for L1 samples 26-48 in a G4567 50-vial ALS
L3	"Layer 3" drawn from: • Position 3 in a 3-vial transport turret • Position 16 in a 16-vial standalone turret • Position 25 for L1 samples 1-23 and position 50 for L1 samples 26-48 in a G4567 50-vial ALS

Each layer has one air gap that is drawn after it and whose volume can be specified. The total volume of all layers and air gaps is displayed. Sums exceeding 75% of the syringe size will be shown in red text and cannot be saved or downloaded.

Injection Types:

Standard	Draws a layer of liquid from a single vial. L1 is always the active sample vial.
2-layer Sandwich	Draws two layers of liquid (L2, L1) separated by air gaps.
2-layer Reverse	Draws two layers of liquid (L1, L2) separated by air gaps in reverse order.
3-layer Sandwich	Draws three layers of liquid (L3, L2, L1.) separated by air gaps.
3-layer Reverse	Draws three layers of liquid (L1, L2, L3) separated by air gaps in reverse order.

3-layer Reverse Switch	Draws three layers of liquid (starting with draw L2, then L1, L3) separated by air gaps.
Multiple Injections	Draws multiple injections of liquid from a single vial.

The **Total Syringe Volume Used** (µL) displays at the bottom of the screen for **2-** and **3-layer Sandwich** injection types.

7890 Series GC, 7820A GC, and 7820 MSD

Press the [**Info**] key to view the possible setpoint ranges for each parameter.

For a 7890 Series GC, press **[Front Injector]** or **[Back Injector]** on the GC keypad. For a 7820A GC and 7820 MSD, press **[Injector]** on the software keypad. Scroll to the desired setpoint detailed below.

Enter a setpoint value, use **[Mode/Type]** to change the selection, or turn the setpoint on or off.

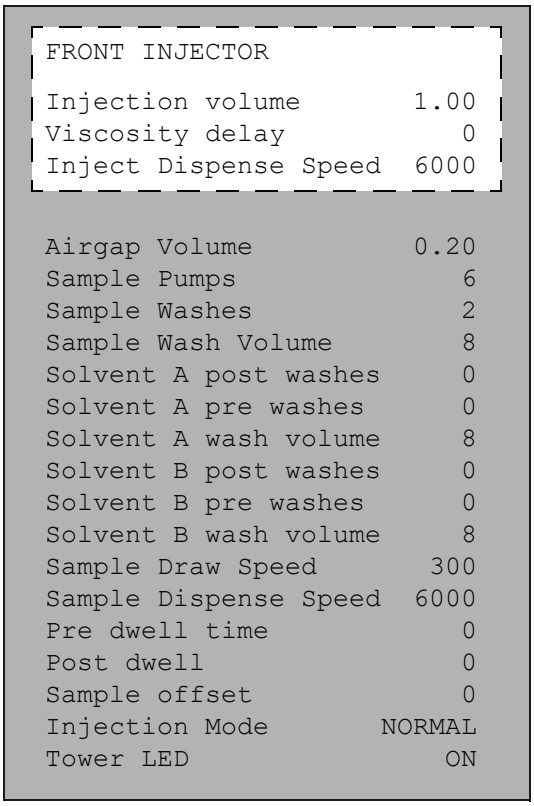

`Injection volume` — Sample volume to be injected. Enter the injection volume in µL up to 50% of the configured syringe size. (Using a 10 µL syringe, entries would be 0.1, 0.2, 0.3, and so forth up to 5 µL.) The GC will round the volume to the next allowable parameter.

`Viscosity delay` — How many seconds the plunger pauses at the top of the pump and injection strokes to wait for the syringe to fill. For viscous samples, the pause allows the sample to flow into the vacuum created in the syringe.

`Inject Dispense Speed` — How many microliters per minute to inject. Parameter value entered here rounds to the nearest acceptable parameter value. For example, 7000 µL/min rounds to 7009 µL/min.

`Airgap Volume` — The amount of air separating the sample from the end of the needle.

`Sample pumps` — How many times the syringe plunger is moved up and down with the needle in the sample to expel air bubbles and improve reproducibility.

`Sample washes` — How many times the syringe is rinsed with sample before the injection. The injector lowers the syringe needle into the sample vial, draws up sample, and empties it into one of the waste bottles.

`Sample Wash Volume` — How many microliters used for the sample wash.

`Solvent A post washes` — How many times the syringe is rinsed with solvent from the solvent A (A1 through A6) bottles.

`Solvent A pre washes` — How many times the syringe is rinsed with solvent from the solvent A (A1 through A6) bottles.

`Solvent A wash volume` — How many microliters used for the sample A wash.

`Solvent B post washes` — How many times the syringe is rinsed with solvent from the solvent B (B1 through B4) bottles.

`Solvent B pre washes` — How many times the syringe is rinsed with solvent from the solvent B (B1 through B4) bottles.

`Solvent B wash volume` — How many microliters used for the sample B wash.

`Sample Draw Speed` — The speed of the syringe plunger during sample injection.

`Sample Dispense Speed` — If using a variable plunger speed, the speed of the sample injection.

`Solvent Draw Speed` — If using a variable plunger speed, the speed of the syringe plunger during solvent injection.

`Solvent Dispense Speed` — If using a variable plunger speed, the speed of the solvent injection.

`Pre dwell time` — How long, in minutes, the needle remains in the inlet before the injection.

`Post dwell` — How long, in minutes, the needle remains in the inlet after the injection.

`Sample offset` — Enables variable sampling depth. The default sampling depth is usually acceptable for standard 2-mL sample vials. However, if using vial inserts or non-standard vials, you may need to adjust the depth. See **"Setting the Sampling Depth in the Method"** on page 167.

`Injection mode` — The type of injection mode.

`Injection Reps` — If Injection mode is LVI with multiple reps, the amount of repetitions.

`Injection Delay` — If Injection mode is LVI with multiple reps, the length of delay between repetitions.

`L2 volume` — If Injection mode is a 2-layer or 3-layer Sandwich Injection, the amount of sample used in layer 2.

`L2 Airgap volume` — If Injection mode is a 2-layer or 3-layer Sandwich Injection, the amount of air used between sample layer 1 and sample layer 2.

`L3 volume` — If Injection mode is a 3-layer Sandwich Injection, the amount of sample used in layer 3.

`L3 Airgap volume` — If Injection mode is a 3-layer Sandwich Injection, the amount of air used between sample layer 2 and sample layer 3.

`Tower LED` — Control the LED light inside the injection tower.

6890 Series GC

Press **[Front Injector]** or **[Back Injector]**.

Scroll to the desired setpoint detailed below.

Enter a setpoint value, use the **[Mode/Type]** key, or turn the setpoint on or off.

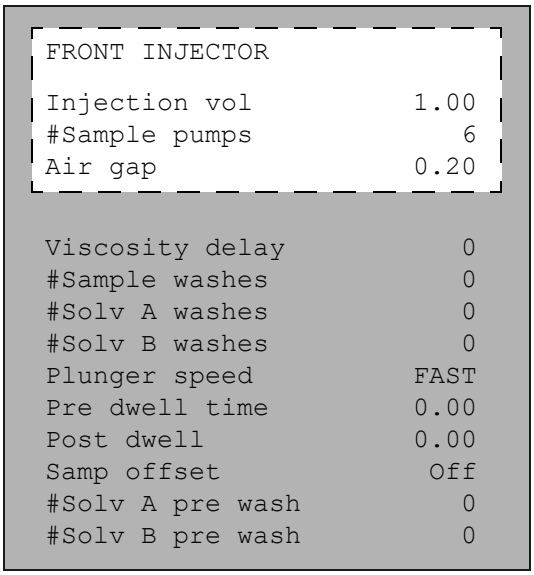

Depending on the **Inject mode** set during injector configuration, the following parameters may be available:

`Injection volume/Sample volume` — Sample volume to be injected. Enter the injection volume in µL up to 50% of the configured syringe size. (Using a 10 µL syringe, entries would be 0.1, 0.2, 0.3, and so forth up to 5 µL.) The GC will round the volume to the next allowable parameter.

Set the injection volume to Off to disable the injector tower.

`L2 volume` — Sample volume to be injected for sample layer 2.

`L3 volume` — Sample volume to be injected for sample layer 3.

`#Injection reps` — For Large Volume injections. How many times the syringe plunger is moved up and down with the needle in the sample to expel air bubbles and improve reproducibility.

`Injection delay` — For Large Volume injections. How many seconds the plunger pauses at the top of the pump and injection strokes. For viscous samples, the pause allows the sample to flow into the vacuum created in the syringe.

`#Sample pumps` — How many times the syringe plunger is moved up and down with the needle in the sample to expel air bubbles and improve reproducibility.

`#L2 pumps` — For 2-sample layer injections. How many times the syringe plunger is moved up and down with the needle in the sample to expel air bubbles and improve reproducibility.

`#L3 pumps` — For 3-sample layer injections. How many times the syringe plunger is moved up and down with the needle in the sample to expel air bubbles and improve reproducibility.

`Air gap` — The amount of air drawn after the sample.

`L2 air gap` — The amount of air drawn after sample layer 2.

`L3 air gap` — The amount of air drawn after sample layer 3.

`Viscosity delay` — How many seconds the plunger pauses at the top of the pump and injection strokes. For viscous samples, the pause allows the sample to flow into the vacuum created in the syringe.

`#Sample washes` — How many times the syringe is rinsed with sample before the injection. The injector lowers the syringe needle into the sample vial, draws up sample, and empties it into one of the waste bottles.

`#Solvent A washes` — How many times the syringe is rinsed with solvent from the solvent A (A, A2, A3) bottles.

`#Solvent B washes` — How many times the syringe is rinsed with solvent from the solvent B (B, B2, B3) bottles.

`Plunger speed` — The speed of the syringe plunger during injection.

`Pre dwell time` — How long, in minutes, the needle remains in the inlet before the injection.

`Post dwell` — How long, in minutes, the needle remains in the inlet after the injection.

`Samp offset` — Enables variable sampling depth. Off disables the setpoint.

The default sampling depth is usually acceptable for standard 2-mL sample vials. However, if using vial inserts or non-standard vials, you may need to adjust the depth. See **"Setting the Sampling Depth in the Method"** on page 167.

`#Solvent A prewash` — How many times the syringe is rinsed with solvent before loading the syringe.

`#Solvent B prewash` — How many times the syringe is rinsed with solvent before loading the syringe.

6850 Series GC

Set all parameters from your Agilent data system. Refer to your data system help for details.

5975T LTM-GC/MSD

Set all parameters from your Agilent data system. Refer to your data system help for details.

Setting the Sample Tray Parameters

If a bar code reader/heater/mixer is installed on your system, set the vial heating and mixing controls. Refer to **Table 8** on page 116 and **Table 7** on page 116 for ALS system capabilities.

8890, 8860, and Intuvo 9000 GCs

On the GC touchscreen or in the Browser Interface, go to **Method > ALS/Tray**, then select the **Tray** tab.

Barcode Heating

Enable Vial Heater — Select or deselect the checkbox to enable or disable the vial heater. The following fields activate when **Enable Vial Heater** is selected:

- **Heat Temperature** — Set the target temperature to heat a vial.
- **Actual** — Displays the current temperature of the vial heater.
- **Heat Time** — Set the amount of time to heat a vial at the specified temperature.

Barcode Mixing

Enable Vial Mixer — Select or deselect the checkbox to enable or disable the vial mixer. The following fields activate when **Enable Vial Mixer** is selected:

- **Mix Cycles** — Set the number of mix cycles per vial. A mix cycle is the length of Mix time at the specified Mix speed. A 5-second wait period is inserted between multiple mix cycles.
- **Mix Time** — Set the amount of time to mix a vial per mix cycle.
- **Mix Speed** — Set the speed to mix the vial.

7890 Series GC, 7820 GC, and 7820 MSD

Press **[Sample Tray]**.

Scroll to the desired setpoint detailed below.

Enter a setpoint value, use **[Mode/Type]** to change the selection, or turn the setpoint on or off.

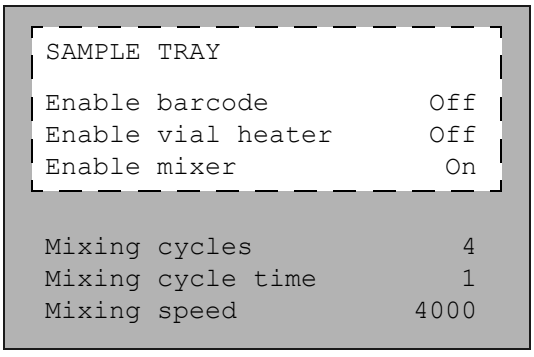

Press **[Info]** to view the possible values to enter.

`Enable barcode` – If installed, enable or disable the Bar Code Reader by choosing On or Off.

`Enable vial heater` – If a BCR is installed, enable or disable the vial heater by choosing On or Off.

`Vial heater temp` – If the vial heater is enabled, set the vial heating temperature.

`Vial heater time` – If the vial heater is enabled, set the vial heating time.

`Enable mixer` – If a BCR is installed, enable or disable the mixer by choosing On or Off.

`Mixing cycles` – If the mixer is enabled, set the number of mixing cycles.

`Mixing cycle time` – If the mixer is enabled, set the mixing cycle time in seconds.

`Mixing speed` – If the mixer is enabled, set the mixing speed in revolutions per minute.

6890 Series GC

The sample tray delivers sample vials to the front and rear injectors according to the defined sequence parameters. There are a separate set of sequence parameters for each injector. The sample tray delivers vials to the front injector before the rear injector. Stored sequences and bar code configurations can be used to tell the sample tray where to deliver and retrieve sample vials.

Press **[Sample Tray]**.

Scroll to the desired setpoint detailed below.

Enter a setpoint value, use the **[Mode/Type]** key, or turn the setpoint on or off.

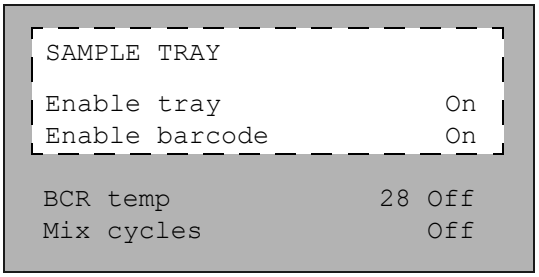

`Enable Tray` — Turn On for a tray sequence, Off for sample bottles in the injector turret.

`Tray temp` — Available if the heating and cooling plate is installed. Displays the actual tray temperature.

`Tray temp target` — Available if the heating and cooling plate is installed. Set the tray target temperature.

`Enable barcode` — Available if the Bar Code Reader is installed. Turns the Bar Code Reader on or off.

`BCR temp` — Displays the actual BCR heater temperature and defines the BCR heater temperature setpoint.

`Mix cycles` — Defines the number of mix cycles.

For more information on the Bar Code Reader, see **"G4515A Bar Code Reader/Mixer/Heater"** on page 26, **"Installing the G4515A Bar Code Reader/Mixer/Heater"** on page 91, or its Operating Manual.

8 Syringes and Needles

Selecting a Syringe 150

Inspecting a Syringe **152**

Installing a Syringe **153**

Removing a Syringe **156**

Replacing a Syringe Needle **157**

The injector uses syringes as the sample-handling device. This chapter describes their properties and uses.

Selecting a Syringe

Refer to the Agilent web site at **www.agilent.com** for a complete selection of syringes and for tools to find the most appropriate syringe for your application.

1 Select the syringe type based on the inlet you are using and the volume of sample you want to inject.

CAUTION

Failure to use an on-column syringe when injecting into an on-column inlet could damage the injector, syringe and column.

2 Select a syringe.

3 Select the appropriate syringe needle gauge (**Table 10**).

Table 10 Needle gauge selection

Inlet type	Column type	Needle gauge
Purged-packed, split or splitless (including MMI and PTV)	Any Applicable	23 gauge 26s gauge or 23/26s gauge tapered
Cool on-column	250 µm 320 µm 530 µm	26s/32 gauge tapered 26s/32 gauge tapered 23/26s gauge tapered or 26s gauge

Table 11 On-column autosampler syringes

Volume (µL)	Description	Unit	Part No.
5	Removable needle, barrel only		5182-0836
	Stainless steel needle for 530 µm column	3/pk	5182-0832
	Stainless steel needle for 0.32 mm column	3/pk	5182-0831
	Stainless steel needle for 0.25 mm column	3/pk	5182-0833
	Plunger button	10/pk	5181-8866

Use syringe needles with a conical tip. Do not use sharp-tipped needles. They tear the inlet septum and cause leaks. Also, a sharp-tipped needle tends to wipe off on the septum as it exits resulting in a large solvent tail on the chromatogram (**Figure 45** and **Figure 46**).

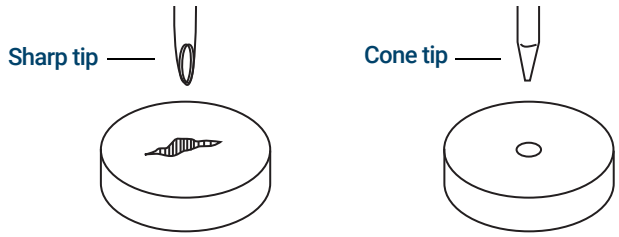

Figure 45. Needle tips

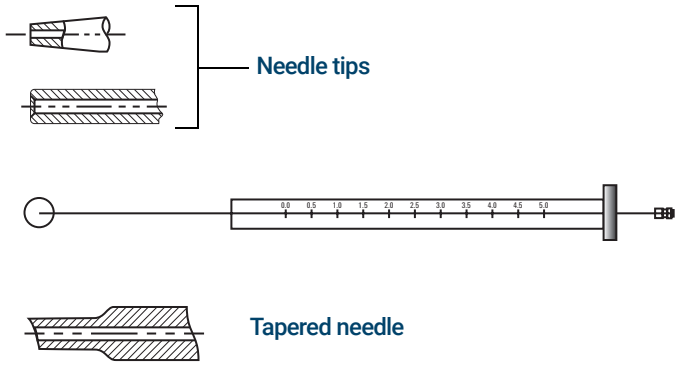

Figure 46. Needle shapes

Inspecting a Syringe

Before installing a syringe:

1 Roll the syringe on the edge of a clean flat surface. If the tip of the needle moves in a circle, straighten the shaft by bending it slightly near where it connects to the syringe barrel and check it again (**Figure 47**).

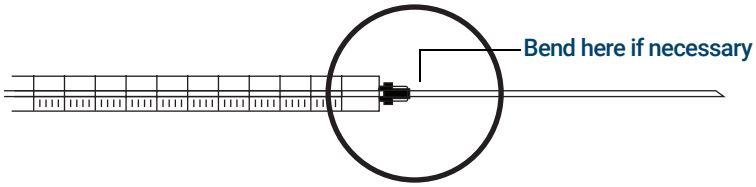

Figure 47. Inspecting the syringe

2 Check for a rough needle. The needle surface may have closely spaced concentric ridges that act like a miniature file and abrade pieces of the septum into the inlet or vial. The ridges are easy to see under 10X magnification.

   If there are ridges, polish the needle by pulling it through a folded piece of fine emery paper between your finger and thumb until the ridges are gone. Be careful not to modify the tip of the syringe.

3 Check for a sticky plunger. Slide the plunger of the syringe up and down a few times. It should move smoothly without sticking or binding. If it is sticky, remove the plunger and clean it with solvent.

Installing a Syringe

To install a syringe (**Figure 48**):

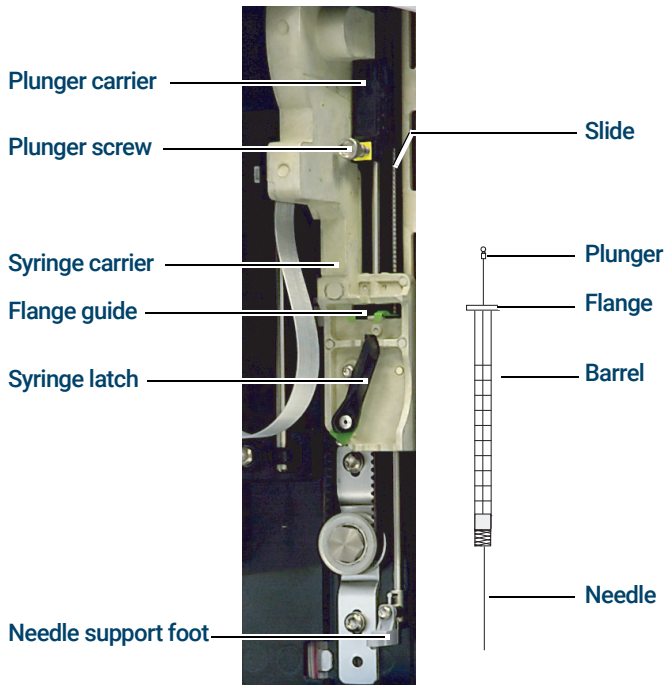

Figure 48. Installing a syringe

1. Unplug the injector cable, and if desired, mount the injector on a parking post, or lay the injector tower on a work bench.
2. Open the injector door.
3. Slide the syringe carriage to the top position.
4. Open the syringe latch by swinging it in a counterclockwise direction.
5. Lift the plunger carrier to the top position.
6. Carefully pass the syringe needle through the guide hole in the needle support foot.
7. Align the syringe flange with the flange guide and press the syringe into place, keeping the needle end in the guide hole of the needle support foot. Make sure that the flat edge of the syringe flange faces out (**Figure 49**).

NOTE

Failure to correctly install the syringe flange into the flange guide will result in damage to the syringe plunger.

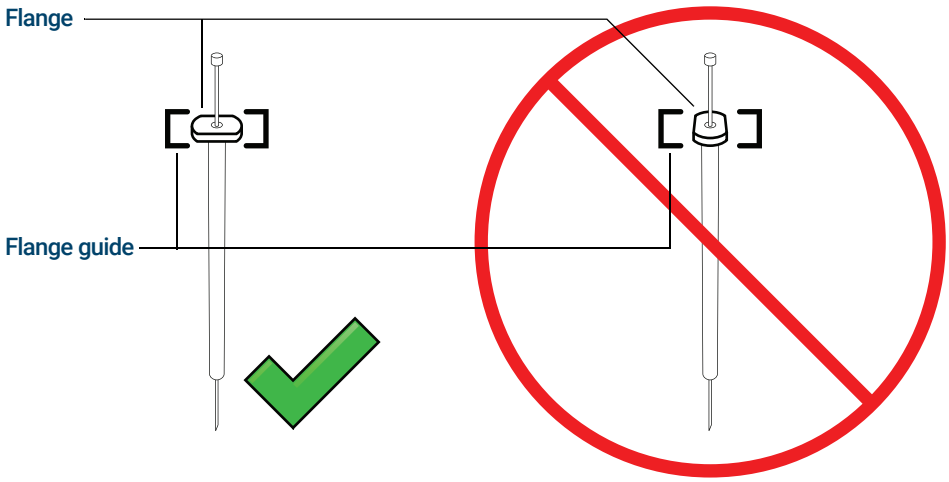

Figure 49. Syringe flange orientation

8 Close the syringe latch by swinging it clockwise until it snaps in place.

9 Loosen the plunger screw entirely by turning it counterclockwise until the stop is reached.

10 Slide the plunger carrier down until it is completely over the syringe plunger, and tighten the plunger thumb screw until finger-tight.

11 Manually move the plunger carrier up and down. If the syringe plunger does not move along with the carrier, repeat the previous steps until installed correctly. Be sure the plunger thumb screw is secure and tight. If the carrier is not completely attached to the syringe plunger it may become detached after a few injections.

CAUTION

Repeating this movement can damage the syringe.

12 Verify that the needle is inside the guide hole of the needle support foot. The needle should be straight and pass freely through the needle guide hole.

If the needle is bent or is outside the guide hole, remove the syringe and reinstall. See **Figure 50** for a properly installed syringe.

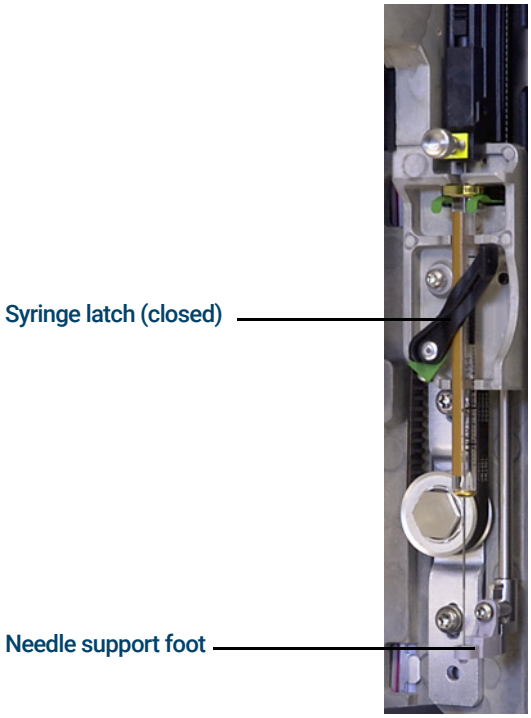

Figure 50. Syringe carriage and needle support with syringe installed

13 Close the injector door.

14 Do the following only if the injector tower was removed from the mounting post during installation:

a If necessary, plug in the injector cable.

b Install the injector on the mounting post. See **"Installing the G4513A Injector"** on page 51 for details.

c If you have a sample tray, calibrate the ALS system. See **"Calibrating the ALS System"** on page 214 for details.

Removing a Syringe

To remove a syringe:

1. Unplug the injector cable, and if desired, mount the injector on a parking post.
2. Open the injector door.
3. Slide the syringe carriage to the top position.
4. Completely loosen the plunger thumb screw until it reaches the stop, and lift the plunger carrier off of the syringe plunger.
5. Open the syringe latch by swinging it in a counterclockwise direction.

CAUTION

Be careful not to bend the syringe needle. Only pull the syringe out of the carriage until clear. The needle bends easily when still seated in the needle support guide.

6. Carefully pull the top of the syringe out of the flange guide, then lift the needle out of the needle support foot.

To install a syringe, see **"Installing a Syringe"** on page 194 for details.

Replacing a Syringe Needle

The stainless steel needles used for 250-µm and 320-µm injections must be inserted into a glass syringe barrel. Select the correct size needle for the column you will use.

Needles for 250-µm injections have silver-colored stops. Needles for 320-µm injections have gold-colored stops. See the Agilent web site at **www.agilent.com** for a list of syringes and needles.

Table 12 On-column autosampler syringes

Volume (µL)	Description	Unit	Part No.
5	Removable needle, barrel only		5182-0836
	Stainless steel needle for 530 µm column	3/pk	5182-0832
	Stainless steel needle for 320 µm column	3/pk	5182-0831
	Stainless steel needle for 250 µm column	3/pk	5182-0833
	Plunger button	10/pk	5181-8866

To insert a needle into a syringe barrel (**Figure 51**):

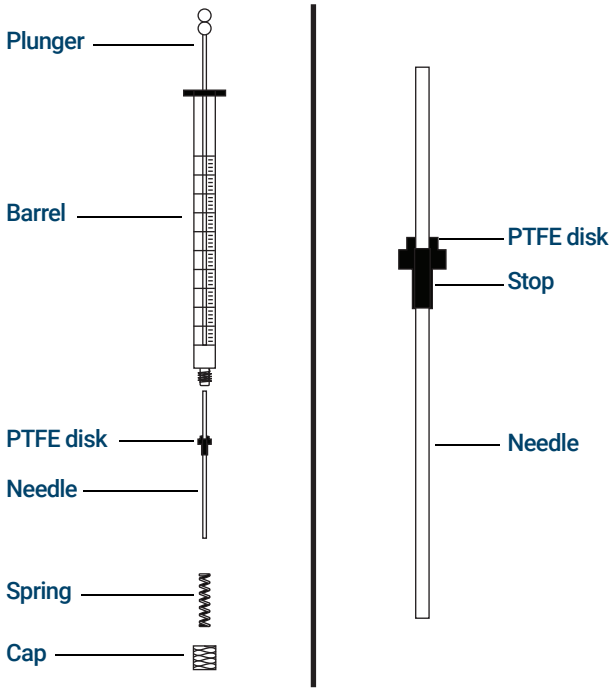

Figure 51. Syringe parts

1. Unscrew the syringe barrel cap and remove the spring.
2. Make sure the needle has a PTFE disk (**Figure 51**). If the syringe barrel does not have the PTFE disk, use the instructions in the syringe box to wrap the needle yourself.
3. Slide the spring and the cap down over the needle.
4. Insert the needle into the syringe barrel.
5. Screw the cap back on the syringe barrel.

9 Vials and Bottles

Preparing a Sample Vial **160**

- Preparing a Sample Vial **160**
- Select a vial septa **160**
- Fill a sample vial **162**
- Label a sample vial **161**
- Cap a sample vial using an electronic crimper **163**
- Cap a sample vial using a manual crimper **163**
- Vial crimping visual checks **165**

Setting the Sampling Depth in the Method **167**

Preparing Solvent and Waste Bottles **168**

- Select the bottles **168**
- Fill the solvent bottles **168**
- Prepare the waste bottles **169**

Placing Vials and Bottles in the Turret **170**

- With a sample tray **171**
- Without a sample tray **171**

Using Two Injectors (8890, 7890 and 6890 Series GCs Only) **172**

- With a sample tray **172**
- Without a sample tray **172**

How Many Sample Vials Can I Run? **173**

Sandwich Injections **178**

- Example 2-layer sandwich injection **178**
- Example 3-layer sandwich injection **179**

This chapter describes sample vials, solvent bottles, and waste bottles, including how to place them in the tray or turret. It also discusses how to estimate the maximum number of samples that can be run before solvent bottles must be refilled or waste bottles must be emptied.

Refer to the Agilent web site at **www.agilent.com** for a complete selection of vials, septa, and caps, and for selection tools to find the most appropriate sample containment solution for your application.

Preparing a Sample Vial

Select a sample vial

The injector and sample tray use clear or amber glass sample vials with crimp caps, or screw-cap vials. Use amber glass vials for light-sensitive samples. Refer to the Agilent web site at **www.agilent.com** for acceptable vial and insert types. Incompatible sample vials cause tray and turret errors.

Figure 52 shows the critical dimensions for sample vials used with the 7693A ALS system. These dimensions do not make up a complete set of specifications.

Body Diameter (BD) = 11.7 ± 0.2
Cap Diameter (CD) = BD × 1.03 maximum
All dimensions in millimeters

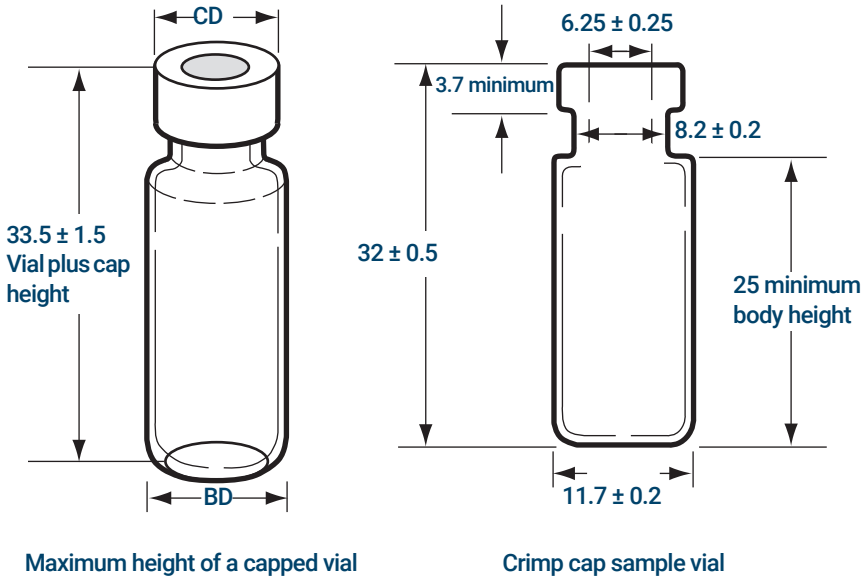

Figure 52. Sample vial dimensions

NOTE

The transfer turret does not work with the Micro-V vial. The bottom of the Micro-V vial can get caught in the turret.

Select a vial septa

There are two types of septa used with crimp caps and screw-on caps, each with different resealing characteristics and different resistance to solvents.

- One type is natural rubber formulation coated with PTFE on the sample side. This septum is suitable for samples with a pH range of 4.0 to 7.5. They are less resistant to solvents after puncture and are more easily cored than silicone rubber septa. Coring may deposit septum pieces in the vial and affect your chromatograms.

- Another is high-quality, low-extractable silicone rubber septa, coated with PTFE on one or both sides. They are more resistant to solvents after puncture and to coring by the needle.

Refer to the Agilent web site at **www.agilent.com** for more information about vial septa.

Figure 53 shows the diameter for vial cap apertures.

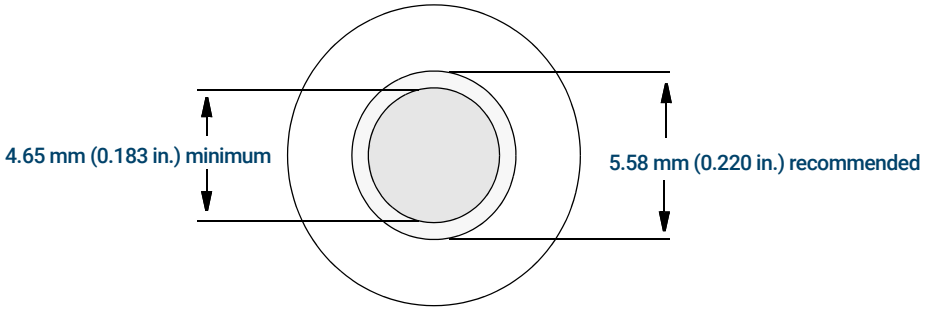

Figure 53. Vial cap aperture specifications

Label a sample vial

Some vials are available with a write-on spot for easy marking. If you choose to make and apply your own labels, Agilent Technologies recommends the positioning and maximum label thickness shown in **Figure 54**.

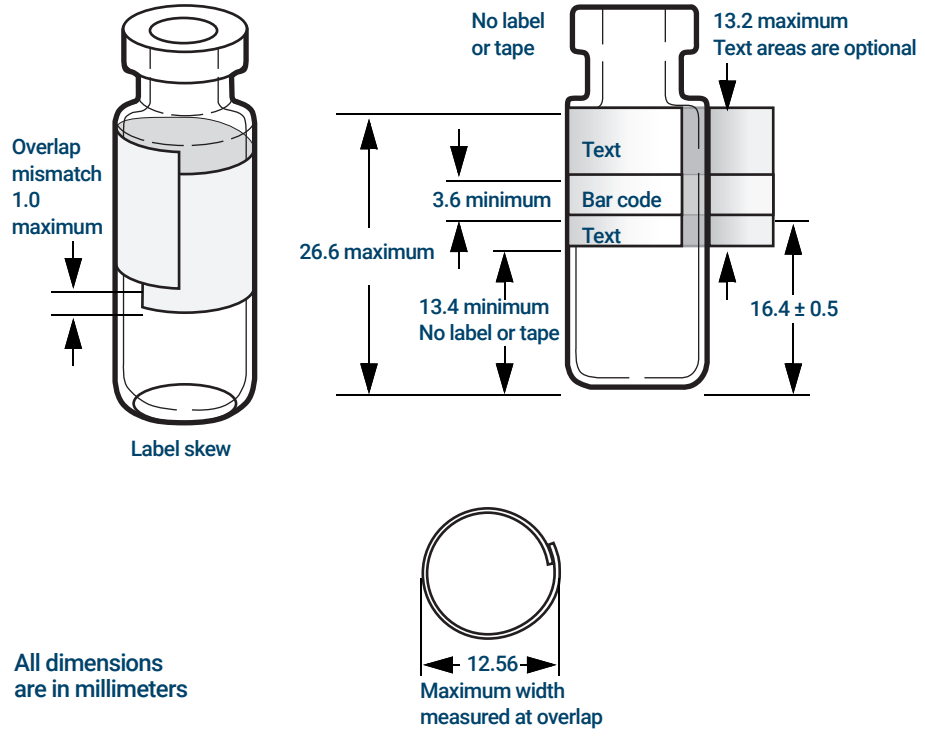

Figure 54. Sample vial label dimensions

CAUTION **Correct sample vial dimensions are critical for proper gripper operation. Vials and labels that do not meet these specifications may cause sampler errors. Service calls and repairs found to be due to vials and microvials that do not meet these specifications are not covered under warranty or the service contract.**

NOTE **Do not use glossy labels when using the bar code reader accessory.**

Fill a sample vial

Figure 55 shows the recommended fill volumes for sample vials of:

- 1 mL for the 2-mL vial
- 50 µL for the 100-µL vial

The air space in the vial is necessary to avoid forming a vacuum when sample is withdrawn. This could affect reproducibility.

CAUTION **Do not inject air into the vials to prevent this vacuum. This often damages the cap seal and may damage syringe needles.**

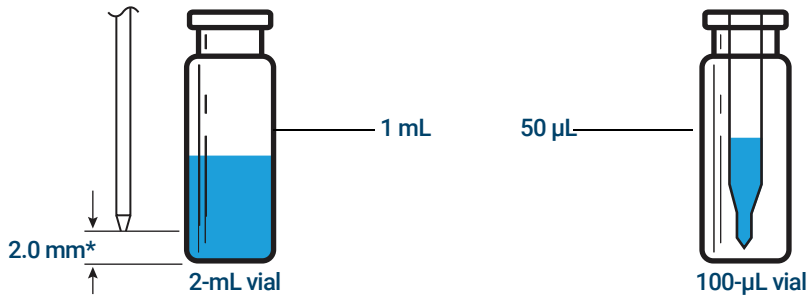

*** Needle position based on default sampling depth.**

Figure 55. Recommended fill volumes for sample vials

When developing your method, keep the following in mind:

- If you need to test a large amount of sample over repeated injections, divide the sample among several vials to obtain reliable results.
- When sample volume in the vial is low, contaminants from the previous sample injection or solvent washes may have a greater impact on the sample.

If you change suppliers, you may need to redevelop your method. Differing manufacturing practices for vial hardware sometimes cause variances in your results.

CAUTION **If using a sample vial with a screw cap, be sure to completely tighten the screw cap before use.**

Cap a sample vial using an electronic crimper

Electronic crimpers provide several advantages over manual crimpers:

- Easy to set and maintain a crimp setting (the crimp setting is usually digital).
- Consistent crimps, independent of operator or hand strength.
- Easily crimp steel vial caps.

To use an electronic crimper, refer to its instructions.

1. Before beginning, clean the inside surfaces of the crimper jaws.
2. If using separate septa and caps, place a septum in a vial cap with the PTFE side facing the vial. Take care not to contaminate the septum.
3. Place the cap upside down on a table.
4. Place the sample in the vial. (Most vials should not be more than 50% full, but some vials can reach 75% full. See **"Fill a sample vial"**.)
5. Place the septum and cap assembly over the vial opening.
6. Cap the vial as described in the electronic crimper's instructions.
7. Check each vial for proper crimping. See **"Vial crimping visual checks"**.

Cap a sample vial using a manual crimper

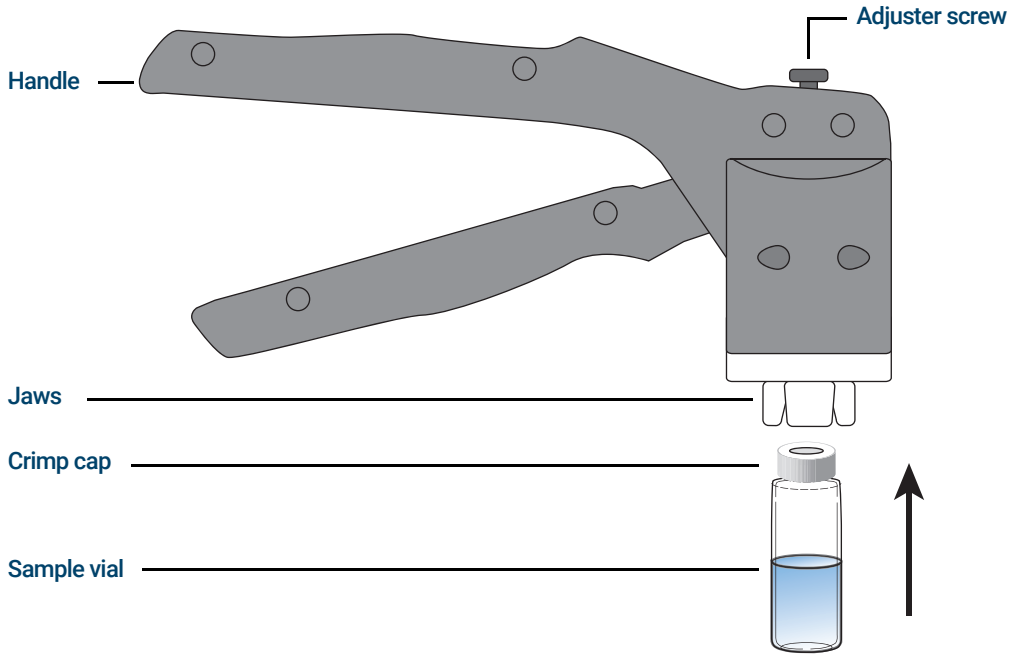

Figure 56. Crimping caps

To install the airtight crimp caps:

1 Clean the inside surfaces of the crimper jaws.

2 If using separate septa and caps, place a septum in a vial cap with the PTFE side facing the vial. Take care not to contaminate the septum.

3 Place the cap upside down on a table.

4 Place the sample in the vial. (Most vials should not be more than 50% full, but some vials can reach 75% full. See **"Fill a sample vial"**.)

5 Place the septum and cap assembly over the vial opening.

6 Lift the vial into the crimper.

7 With slow and steady pressure, squeeze the crimper handles to seal the vial. (Squeeze the handle until it reaches the adjustment screw.)

8 Check each vial for proper crimping. See **"Vial crimping visual checks"**.

Vial crimping visual checks

Check each vial for proper crimping.

Figure 57 shows proper and improper vial caps.

Figure 57. Acceptable and unacceptable vial caps

- Be sure there are no folds or wrinkles on the part of the cap that wraps under the neck of the vial. To remove folds or wrinkles, turn the vial about 10° and crimp it again. Adjust the crimper for a looser crimp by turning the adjusting screw clockwise.

- The cap should be finger-tight. If the cap is loose, adjust the crimper for a tighter crimp by turning the adjusting screw counterclockwise. Crimp the cap again. If the cap is too tight, the septum will distort and the vial may leak.
- Be sure that each cap has a flat septum centered over the top of the vial.
  - If the septum is not flat, remove the cap, turn the crimper adjusting screw clockwise, and try again.
  - If the cap is not centered, remove the cap and make sure the new cap is flat on the top of the vial before you squeeze the crimper.

Note that overcrimping puts additional stress on both the cap and the vial.

Setting the Sampling Depth in the Method

If using standard 2 mL sample vials, as shown in Figure 58, the default needle position is typically acceptable when using a 1 mL fill volume.

If using vial inserts, however, the default sampling depth may cause the syringe needle to impact the bottom of the insert. Set the default sampling depth to 1.6 mm (which provides a nominal sampling depth of 3.6 mm total from the bottom of the sampling vial). Adjust this depth as needed, depending on the vial and insert used.

*** Needle position based on default sampling depth.**

Figure 58. Needle sampling depth

Preparing Solvent and Waste Bottles

The solvent bottles hold solvent for rinsing the syringe between injections. The injector dispenses the solvent washes and sample washes into waste bottles. The number of samples that can be analyzed may be limited by the wash or waste bottle capacity.

Select the bottles

Solvent and waste bottles can be closed with either diffusion caps (a plastic cap with a hole; it retards evaporation while letting the needle enter freely) or septa. Agilent Technologies recommends diffusion caps (**Figure 59**) over septa for two reasons:

- The diffusion cap allows multiple entrances into a bottle without contaminating the liquid inside the bottle with small pieces of septum material.
- For common solvents, the rate of diffusion out of the bottle is less with a diffusion cap than with a septum that has been punctured multiple times with a standard syringe needle.

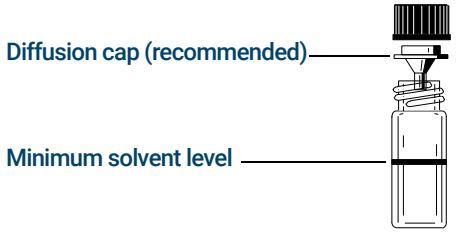

Figure 59. Four milliliter bottle used for solvent or waste

Fill the solvent bottles

Rinse and fill each solvent bottle with 4 mL of fresh solvent. The liquid level will be near the shoulder of the bottle. Good laboratory practice dictates using no more than 2.0 mL of the 4 mL solvent for syringe washes. The needle tip draws solvent 18.5 mm from the bottom of the vial (**Figure 60**).

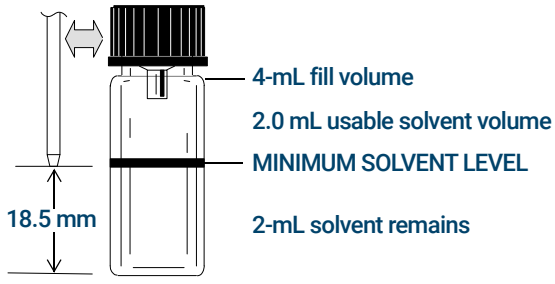

Figure 60. Needle tip position when withdrawing solvent

Prepare the waste bottles

Empty and rinse each waste bottle after each multiple vial run. The syringe can discard about 4 mL of waste into the waste bottle (**Figure 61**).

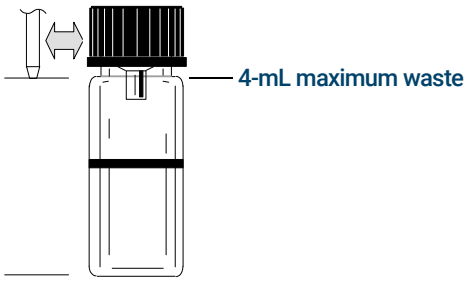

Figure 61. Needle tip position when discharging waste

Placing Vials and Bottles in the Turret

Two turrets are provided with the G4513A injector (**Figure 62**). The 16-sample standalone turret, and the 3-sample transfer turret.

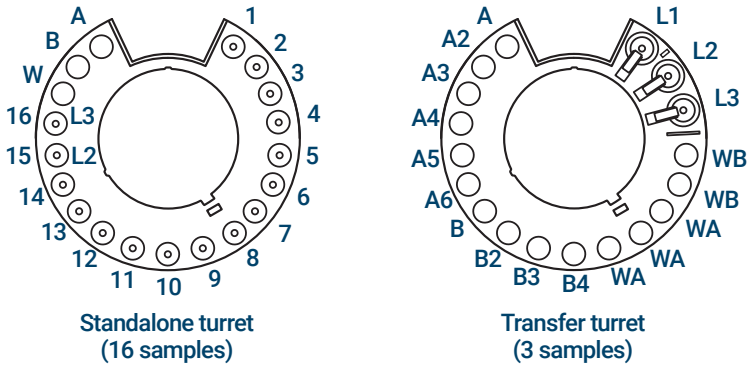

Figure 62. Injector turrets

The labeled positions are defined in **Table 13** and **Table 14**.

Table 13 Standalone turret labels

Position	Label	Bottle/Vial
1 through 14	1 through 14	Sample vials
15	15 L2	Sample vial Layer 2 bottle
16	16 L3	Sample vial Layer 3 bottle
17	W	Waste bottle
18	B	Solvent B bottle
19	A	Solvent A bottle

Table 14 Transfer turret labels

Position	Label	Bottle/Vial
1	L1	Dedicated vial transfer position A Layer 1 bottle
2	L2	Configurable vial transfer position B Layer 2 bottle
3	L3	Configurable vial transfer position C Layer 3 bottle

Table 14 Transfer turret labels (continued)

Position	Label	Bottle/Vial
4 and 5	WB	Waste B1 - B2 bottles
6 through 8	WA	Waste A1 - A3 bottles
9 through 12	B - B4	Solvent B1 - B4 bottles
13 through 18	A - A6	Solvent A1 - A6 bottles

With a sample tray

You must use the transfer turret. Place up to 150 samples in the three vial racks, according to the programmed sequence. **Figure 63** shows tray loading for a sequence that uses tray positions 6 through 21.

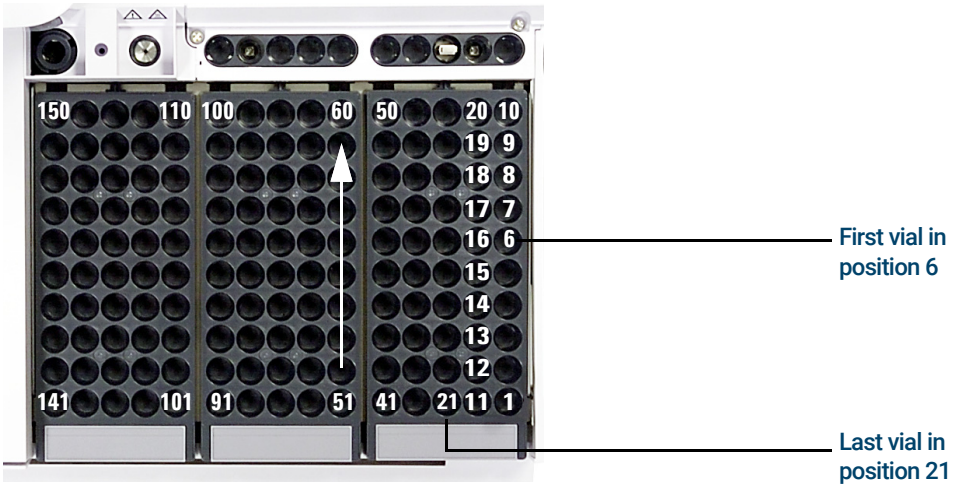

Figure 63. Loading tray positions

Without a sample tray

You can place up to sixteen vials, a solvent A, a solvent B, and a waste bottle in the standalone turret. If you use the transfer turret, you can load three sample vials and the solvent and waste bottle capacity increases to 15 (**Figure 62**).

Using Two Injectors (8890, 7890 and 6890 Series GCs Only)

With two injectors mounted on the GC, you can use the front injector, the back injector, or both injectors simultaneously.

Two-injector configurations have the following characteristics:

- The system sends one injector ready signal to the GC when both injectors are ready and one start signal at the beginning of the injection stroke.
- The two injectors inject simultaneously.

With a sample tray

Set run parameters for each injector in the sequence. When you set up the run parameters, you must identify which data channel is for which injector on a 7890A or 6890 Series GC.

- When using a 7890A or 6890 Series GC for sampler control, you assign the channel when you set up the sequence.
- When using the Agilent data system, refer to its online help when defining the instrument channels.

When both injectors have samples, they begin the injection cycle together, including any sample washes. After they have completed the specified sampling steps, they inject the samples. After the injection, both injectors go through the solvent wash cycle. When both injectors are done, the tray picks up the sample vial from the front injector and returns it to its original position on the tray, then picks up the vial from the back injector and returns it to its original position.

Without a sample tray

The injectors go through the same motions as with a sample tray. The injectors inject samples from position 1 first, followed by samples from the remaining sample vial positions. If the two injectors do not have the same number of samples, the injector that completes its sequence first remains idle while the other finishes.

How Many Sample Vials Can I Run?

The number of sample vials that you can run at one time is determined by the following parameters for your application:

- The number of sample injections per sample vial.
- The syringe size used: 1 µL to 500 µL.
- The syringe wash volume (**Table 15**)
- The number of solvent washes (both pre- and post-injection) required from each solvent bottle.
- The number of sample washes and solvent washes per sample injection that the injector discards into each waste bottle.
- Number of waste bottles.

Table 15 Syringe wash volumes

Syringe Size (µL)	80% syringe volume µL	40% syringe volume µL	30% syringe volume µL	20% syringe volume µL	10% syringe volume µL
1	0.8	0.4	0.3	0.2	0.1
2	1.6	0.8	0.6	0.4	0.2
5	4	2	1.5	1	0.5
10	8	4	3	2	1
25	20	10	7.5	5	2.5
50	40	20	15	10	5
100	80	40	30	20	10
250	200	100	75	50	25
500	400	200	150	100	50

Solvent bottle equation (injector)

CAUTION

The number of sample vials given by these equations are estimates. Solvent characteristics such as evaporation rate and surface tension may affect the capacity of the bottles.

This equation estimates the maximum number of sample vials you can run from one solvent bottle.

Maximum number of sample vials per solvent bottle

$$= \frac{2000}{V_W \times N_{SI} \times N_{SW}}$$

where:

V_W = Volume of Wash in µL taken from **Table 15**

N_{SI} = Number of sample injections taken from each sample vial

N_{SW} = Number of Solvent washes (pre and post) per sample injected

Waste bottle equation

This equation estimates the maximum number of sample vials you can run per one waste vial type (A or B).

Maximum number of sample vials per waste bottles used (WA or WB)

$$\frac{V_{Waste}}{W_{Wash} \times N_{SI} \times N_{SS}} \times W$$

where:

V_{Waste} = Volume of waste bottles used in µL. Use 4000.

V_{Wash} = Volume of wash in µL taken from **Table 15**

N_{SI} = Number of sample injections taken from each sample vial

N_{SS} = Total number of pre- and post-solvent A or solvent B washes and sample washes per sample injected. When using both solvent A and B, the sample wash is divided evenly between all four waste bottles in the 1-sample turret

W = Waste vial usage.

Standalone, W = 1
Transfer, W = 3 for waste A, W = 2 for waste B

Example

A tray is installed with a 3-sample transfer turret in the injector. Your application parameters are:

- Two injections per vial
- Three washes from solvent bottle A
- Two washes from solvent bottle B
- Two sample washes
- 10-µL syringe
- 80% wash volume (default)

1 Substitute the parameters of your application into the solvent bottle equation:

For Solvent A

V_W = 8 from **Table 15**
N_{SI} = 2
N_{SW} = 3

Maximum number of sample vials per solvent bottle

$$= \frac{2000}{8 \times 2 \times 3} = 41$$

For Solvent B

V_W = 8 from **Table 15**
N_{SI} = 2
N_{SW} = 2

Maximum number of sample vials per solvent bottle

$$= \frac{2000}{8 \times 2 \times 2} = 62$$

2 Substitute the parameters of your application into the waste bottle equation:

For Waste A

V_{Waste} = Use 12000 for the 3-sample transfer turret
V_{Wash} = 8 from **Table 15**
N_{SI} = 2
N_{SS} = 3 (solvent A washes) + 1 (Sample wash) = 4

Maximum number of sample vials per waste bottles used (WA)

$$= \frac{12000}{8 \times 2 \times 4} = 187.5$$

For Waste B

V_{Waste} = Use 8000 for the 3-sample transfer turret
V_{Wash} = 8 from **Table 15**
N_{SI} = 2
N_{SS} = 2 (solvent B washes) + 1 (sample wash) = 3

Maximum number of sample vials per waste bottles used (WB)

$$= \frac{8000}{8 \times 2 \times 3} = 166$$

3 Analyze the results keeping the following in mind:

- The 3-sample transfer turret has 3 waste A bottles and 2 waste B bottles. If solvent A is used, all waste A bottles must be used. If solvent B is used, all waste B bottles must be used.
- Sample washes are evenly distributed to all waste bottles used.
- The injector can be configured to use 1 A, 1 B; 2 A's, 2 B's; or all 6 A's and 4 B's.

Using a single solvent bottle of each type, all five waste bottles must be used; 41 vials can be run. Using two solvent A bottles and two solvent B bottles, 84 vials can be run. If you use three solvent A bottles and three solvent B bottles, you can run 150 vials which is the tray capacity limit.

CAUTION

We strongly recommend that *all* waste positions in *all* turrets contain bottles at *all* times, regardless of which ones are actually used in the current configuration. This protects against accidental discharge of solvent into the turret body, which could damage it.

Reduced solvent and sample usage

Solvent and sample washes by default use 80% of the syringe capacity. Solvent and sample can be conserved by reducing this volume. This is done by configuring each injector's solvent saving setting.

CAUTION

PTFE-tipped syringes must be used to lubricate the barrel wall. Standard syringes, will fail quickly with limited lubrication.

The solvent wash can be set to use less than the usual 80%. This modifies the solvent wash process as follows:

1. The syringe draws in solvent to the percent specified, which can be as little as 10% of the syringe size.
2. The syringe and needle rise out of the solvent bottle.
3. The plunger rises to the 80% mark, rinsing the syringe barrel with solvent, followed by air.
4. The solvent and air are discharged into a waste bottle.

Confirm that sample carryover (see "Sample Carryover") is not a problem with the reduced solvent washes.

Sandwich Injections

The ALS system has the ability to draw liquid from multiple vials to create multilayered, or sandwich, injections. Each layer of sample, internal standard, or solvent can be separated by a layer of air (from 0% to 10% of the syringe size). **Figure 64** and **Figure 65** show examples of 2-and 3-layer sandwich injections.

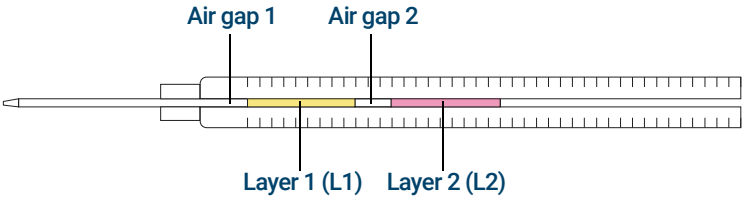

Figure 64. 2-layer sandwich injection

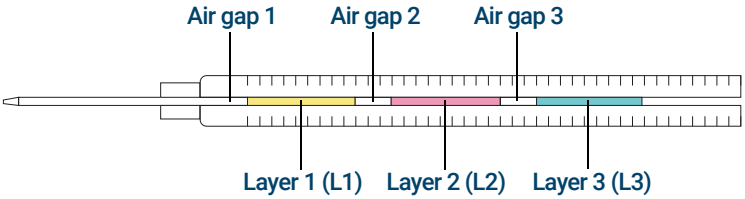

Figure 65. 3-layer sandwich injection

When loading vials for sandwich injections, layer 1 (L1) can be placed in any turret position 1-14 if using a standalone turret, or in any tray position 1-150 if using a transfer turret with sample tray. The vials for layer 2 (L2) and layer 3 (L3) must be placed in turret positions **L2** and **L3** (**Figure 66**), respectively.

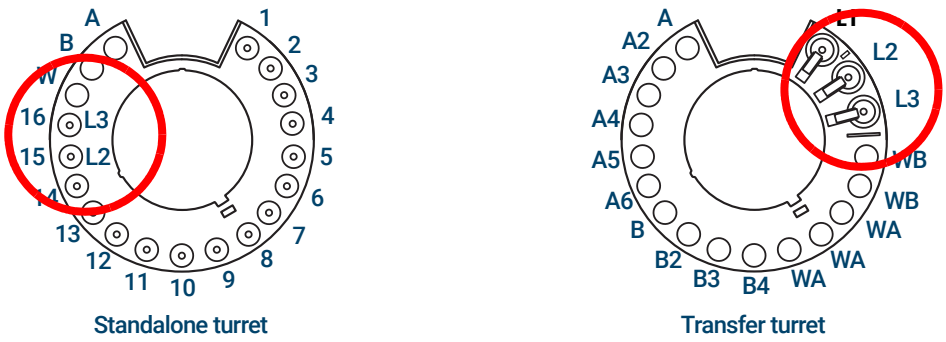

Figure 66. Turret vial locations for sandwich injections

For the following examples, we assume the use of a 7890 Series GC with a front injector and sample tray. Refer to "Setting the Injector Parameters" for more information.

Example 2-layer sandwich injection

This example applies to 8890, 8860, and 9000 GCs. The steps for other GCs, such as a 7890, are similar.

Suppose you want to create a 2-layered sandwich injection using 2.0 µL of sample and 15 µL of solvent separated by 0.10 µL air gaps (**Figure 67**).

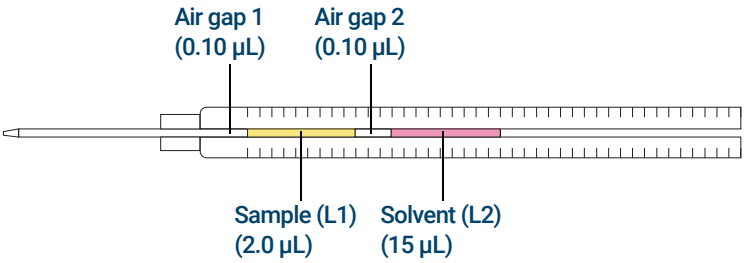

Figure 67. Example 2-layer sandwich injection with 2.0 µL of sample and 15 µL of solvent

1. Place the sample vial (L1) in tray position **1**.
2. Place the solvent vial (L2) in turret position **L2**.
3. Using the GC touchscreen or browser interface, go to **Method > ALS/Tray** and select the tab for the injector.
4. Set the **Injection Volume** to 2.0 µL.
5. Scroll to **Injection Type** (or Layered Injection) and select **2-Layer Sandwich** from the **Mode** drop-down list.
6. Set the following parameters for the injector:
   - **Layer 1 Air Gap (µL)**: 0.1
   - **Layer 2 Volume (µL)**: 15.0
   - **Layer 2 Air Gap (µL)**: 0.1

   For a 2-layer injection, **Layer 3 Volume (µL)** and **Layer 3 Air Gap (µL)** will be disabled. Also note that for 2- and 3-layer injection modes, the **Injection volume** parameter (in the **Syringe** group box) represents layer 1's volume.
7. Save the method.
8. Set up a sequence to use the method. Create the sequence to run vial 1.
9. Start the sequence.

Example 3-layer sandwich injection

This example applies to 7890 GCs. The steps for other GCs, such as 8890, 8860, and 9000 GCs, are similar.

Suppose you want to create a 3-layered sandwich injection using 10 µL of solvent A, 2.0 µL of sample, and 15 µL of solvent B separated by 0.10 µL air gaps (**Figure 68**).

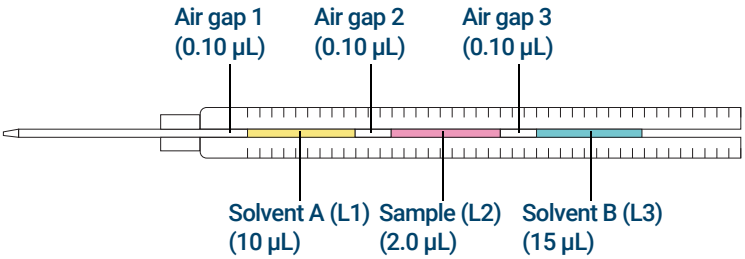

Figure 68. Example 3-layer sandwich injection with 10 µL of solvent A, 2.0 µL of sample, and 15 µL of solvent B

1 Place the solvent A vial (L1) in tray position **1**.

2 Place the sample vial (L2) in turret position L2.

3 Place the solvent B vial (L3) in turret position L3. Refer to **Figure 64** on page 178 for turret position information.

4 Press **[Front Injector]** on the GC keypad.

5 Scroll to **Injection Mode** and select **3-LAYER**.

6 Set the following parameters for the front injector:

- Injection volume—**10 µL**
- Airgap Volume—**0.10 µL**
- L2 volume—**2 µL**
- L2 Airgap Volume—**0.10 µL**
- L3 volume—**15 µL**
- L3 Airgap Volume—**0.10 µL**

Note that for 2- and 3-layer injection modes, **Injection volume** and **Airgap volume** represent layer 1 (L1) parameters.

7 Store the method parameters:

a Press **[Method]** on the GC keypad.

b Scroll to an available method number.

c Press **[Store]** to select the method number.

d Press **[Yes]** to confirm.

8 Set up the sandwich injection sequence:

a Press **[Seq]** on the GC keypad.

b Scroll to **Method #** under **Subseq 1** and press **[On/Yes].**

c Enter the method number from **step 7** using the GC numeric keypad, and press **[Enter]** to confirm the entry.

d Scroll to **Samples** and press **[1] [.] [1]** to set the vial range on the sample tray, and press **[Enter]** to confirm the entry.

9 Run the sandwich injection sequence:

a Press **[Seq Control]** on the GC keypad.

b Scroll to **Start sequence** and press **[Enter]**. The sandwich injection sequence begins.

10 Running Samples

Running a Sample **184**
Injection volume **184**
Using the ALS Controller **185**
Interrupting a Run or Sequence **186**
Sampler response to interruptions **186**
Restarting an interrupted sequence **186**
Running a Priority Sample **187**

This chapter describes the process for running one or more samples.

Running a Sample

WARNING

When running a sample, keep your hands away from the syringe needle. The needle is sharp and may contain hazardous chemicals.

To operate your automatic liquid sampler:

1. Install a clean syringe. See **"Installing a Syringe"** on page 153.
2. Fill the solvent bottles. See **"Preparing Solvent and Waste Bottles"** on page 168.
3. Place the solvent and waste bottles in the turret. See **"Placing Vials and Bottles in the Turret"** on page 170. Always place empty waste bottles in all available waste bottle locations to prevent accidental sample or solvent discharge into the turret.
4. Load the sample vials into the turret or the tray. See **"Preparing a Sample Vial"** on page 160.
5. Prepare the GC sequence. See your GC or data system documents.
6. Run the sequence by pressing the start button on the GC. When the GC is ready, the ALS begins the injections.

Injection volume

The injection volume depends on the sample size and the syringe size.

- Syringe size may be 1 µL, 2 µL, 5 µL, 10 µL, 25 µL, 50 µL, or 100 µL for the standard syringe carriage.
- Syringe size may be 250 µL or 500 µL for the enhanced sample handling syringe carriage.
- Sample size may be 1-50% of the syringe size in 1% increments.

Using the ALS Controller

When the ALS controller is on a 6890A GC:

- [**Start**] on the G4517A ALS Controller is disabled.
- Pressing [**Start**] on the 6890A GC starts the sequence.
- Pressing [**Stop**] on the G4517A ALS Controller stops the ALS controller sequence, and if the GC is waiting for a signal from the controller to start a run, an error message is displayed on the GC. To resume the sequence, see the following section on **"Restarting an interrupted sequence"** on page 186.

Interrupting a Run or Sequence

The following events interrupt a run:

- Power failures—The power to the GC or controlling device fails.
- Stop commands—**[Stop]** on the GC is pressed, or the Stop Run/Abort option is selected from the Agilent data system.
- Safety or operator faults—The sampler recognizes these fault(s):
  - The injector door was opened
  - Turret error
  - Plunger error
  - Tray arm axis error
  - The injector was moved on the GC during injection
  - The tray failed to deliver a vial

Sampler response to interruptions

If the interruption was caused by a problem that the sampler recognizes, a message appears on the GC or Agilent data system. The 6890A, and 6890 Plus GCs do not display sampler messages. For more information, see **"Error Messages"** on page 223.

- Power failure—Aborts the run. Restart the sequence (see below).
- Stop commands—Interrupts the run. Restart the sequence (see below).
- Safety or operator faults—Aborts the run. Restart the sequence (see below).

Restarting an interrupted sequence

To restart an aborted sequence from the point of interruption:

1. Resolve the problem that caused the interruption.
2. The tray automatically moves any unknown vials found in the gripper arms or in an unexpected location to the unknown vials station.
3. The tray automatically starts the run with the next vial in the sequence.

   This allows normal operation to continue after an interruption without delaying the entire sequence.

Running a Priority Sample

7890 and 6890 Series GCs

If the **Use priority** parameter is on in your GC sequence, the sample tray checks for a vial in position 150 before loading a new vial into the injector turret. If it finds a vial there, it loads that sample vial into the turret and runs it according to the method you assigned for priority samples.

When the priority sample run is completed, it returns the priority sample vial to tray position 149, therefore keeping position 150 empty when using this feature. The tray gripper again checks vial position 150 and, if there is no vial there, continues your original sequence from where it was interrupted. For more information on how to program priority sequences, see your 6890 GC documentation.

Other GC models

1. Pause the running sequence. The samples already started will continue through completion.
2. Place the priority samples in the tray.
3. Edit the sequence (in the data system or browser interface) to include the new samples to run next.
4. Resume the sequence.

10 Maintenance and Troubleshooting

Maintenance 191

- Periodic Maintenance 192
- Tray Home and Park Positions 193
- Installing a Syringe 194
- Removing a Syringe 197
- Changing the Turret 198
- Adapting for Cool On-Column Injection 201
- Replacing the Needle Support Foot 202
- Adapting for Syringes Over 100 µL 203
- Replacing the Syringe Carriage Assembly 204
- Replacing a Syringe Needle 209
- Aligning the Injector 211
- Aligning the Sample Tray 213
- Calibrating the ALS System 214
- Replacing Power Fuses in the G4517A ALS Controller 217

Faults and Errors 219

- Faults 220
- Error Messages 223

Troubleshooting 227

- Symptom: Variability 228
- Symptom: Contamination or Ghost Peaks 230
- Symptom: Smaller or Larger Peaks Than Expected 231
- Symptom: Sample Carryover 233
- Symptom: No Signal/No Peaks 234
- Correcting Syringe Problems 235
- Correcting Sample Vial Delivery Problems 236

Replacement Parts 237

- G4513A Injector 238
- G4514A Sample Tray 241
- G4517A ALS Controller (6890A GC Only) 243
- G4516A ALS Interface Board (6890 Plus GC Only) 244

This page intentionally left blank.

11 Maintenance

Periodic Maintenance 192
Tray Home and Park Positions 193
Installing a Syringe 194
Removing a Syringe 197
Changing the Turret 198
Adapting for Cool On-Column Injection 201
Replacing the Needle Support Foot 202
Adapting for Syringes Over 100 µL 203
Replacing the Syringe Carriage Assembly 204
Replacing a Syringe Needle 209
Aligning the Injector 211
Aligning the Sample Tray 213
Calibrating the ALS System 214
Replacing Power Fuses in the G4517A ALS Controller 217

The information in this chapter will assist you in keeping the sampler running smoothly.

Periodic Maintenance

This section contains some suggestions for ensuring good performance of your Automatic Liquid Sampler system. The maintenance interval varies with the use of the instrument.

CAUTION

Do not use any lubricants on the Automatic Liquid Sampler. They may affect the chemical performance of the GC and damage the instrument.

CAUTION

When cleaning the instrument, as described below, use a damp (not wet!), lint-free cloth. Do not use chemical cleaners.

On an occasional basis:

- Calibrate the ALS system. See **"Calibrating the ALS System"** on page 214 for details.
- Clean the gantry, tray base, vial racks, turrets, and other surfaces.
- Wipe away any excess spill remains from the spill tray found underneath the turret. See **"Removing the turret"** on page 199 for details.
- Clean the needle support foot and nearby surfaces on the injector. Dust and dirt accumulate in these areas and can be picked up by the syringe needle and carried into the inlet.
- Inspect the needle support foot for signs of wear, and replace if necessary. See **"Replacing the Needle Support Foot"** on page 202 for details.
- Clean the injector surfaces and door.
- Vacuum any dust found on or around the vents on the injector or tray.
- Make sure the injector mounting post is tight.
- Make sure the tray mounting screws are tight.
- Make sure the mounting bracket screws are tight.
- Be sure all cables are securely connected.
- If using a liquid heating and cooling plate, the drainage tubing must allow any condensate to drain easily with no back pressure. Make sure that:
  - The tubing slopes downward towards the drainage container.
  - The tubing is kept straight without kinks that may block the flow.
  - The open end of the tubing is not submersed in the drainage container.
  - The tubing does not become clogged or dirty. Replace tubing if necessary.

Tray Home and Park Positions

Figure 69. Tray in Park position

Figure 70. Tray in Home position

Installing a Syringe

The 8890, 9000, and 8860 GCs include automated procedures to help you replace a syringe. Go to **Maintenance**, select the injector, then select **Perform Maintenance** to access the automated procedure.

To install a syringe (**Figure 71**):

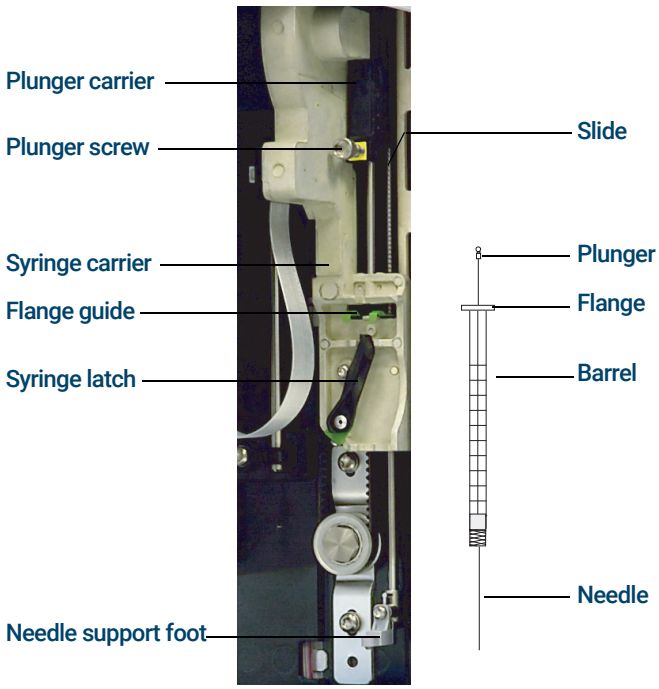

Figure 71. Installing a syringe

1. Unplug the injector cable, and if desired, mount the injector on a parking post, or lay the injector tower on a work bench.
2. Open the injector door.
3. Slide the syringe carriage to the top position.
4. Open the syringe latch by swinging it in a counterclockwise direction.
5. Lift the plunger carrier to the top position.
6. Carefully pass the syringe needle through the guide hole in the needle support foot.
7. Align the syringe flange with the flange guide and press the syringe into place, keeping the needle end in the guide hole of the needle support foot. Make sure that the flat edge of the syringe flange faces out (**Figure 72**).

NOTE

Failure to correctly install the syringe flange into the flange guide will result in damage to the syringe plunger.

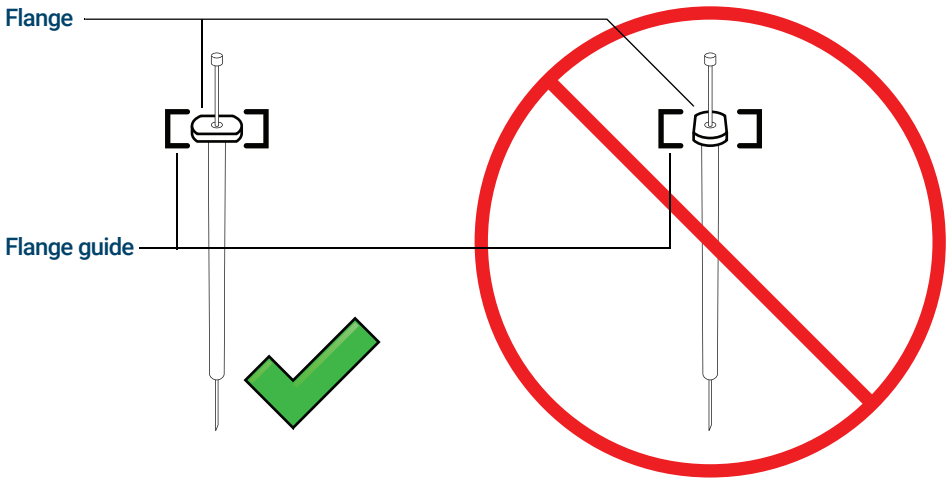

Figure 72. Syringe flange orientation

8 Close the syringe latch by swinging it clockwise until it snaps in place.

9 Loosen the plunger screw entirely by turning it counterclockwise until the stop is reached.

10 Slide the plunger carrier down until it is completely over the syringe plunger, and tighten the plunger thumb screw until finger-tight.

11 Manually move the plunger carrier up and down. If the syringe plunger does not move along with the carrier, repeat the previous steps until installed correctly. Be sure the plunger thumb screw is secure and tight. If the carrier is not completely attached to the syringe plunger it may become detached after a few injections.

CAUTION

Repeating this movement can damage the syringe.

12 Verify that the needle is inside the guide hole of the needle support foot. The needle should be straight and pass freely through the needle guide hole.

If the needle is bent or is outside the guide hole, remove the syringe and reinstall. See **Figure 73** for a properly installed syringe.

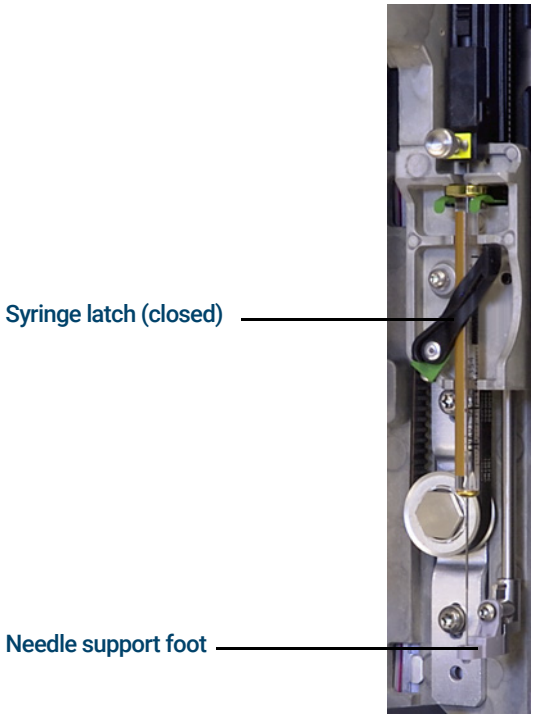

Figure 73. Syringe carriage and needle support with syringe installed

13 Close the injector door.

14 Do the following only if the injector tower was removed from the mounting post during installation:

a If necessary, plug in the injector cable.

b Install the injector on the mounting post. See **"Installing the G4513A Injector"** on page 51 for details.

c If you have a sample tray, calibrate the ALS system. See **"Calibrating the ALS System"** on page 214 for details.

Removing a Syringe

The 8890, 9000, and 8860 GCs include automated procedures to help you replace a syringe. Go to **Maintenance**, select the injector, then select **Perform Maintenance** to access the automated procedure.

To remove a syringe:

1. Unplug the injector cable, and if desired, mount the injector on a parking post.
2. Open the injector door.
3. Slide the syringe carriage to the top position.
4. Completely loosen the plunger thumb screw until it reaches the stop, and lift the plunger carrier off of the syringe plunger.
5. Open the syringe latch by swinging it in a counterclockwise direction.

CAUTION

Be careful not to bend the syringe needle. Only pull the syringe out of the carriage until clear. The needle bends easily when still seated in the needle support guide.

6. Carefully pull the top of the syringe out of the flange guide, then lift the needle out of the needle support foot.

To install a syringe, see **"Installing a Syringe"** on page 194 for details.

Changing the Turret

Two turrets are provided with the G4513A injector (**Figure 74**). The 16-sample standalone turret, and the 3-sample transfer turret.

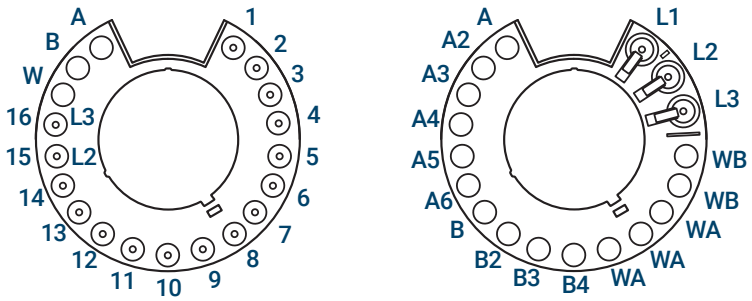

Figure 74. Injector turrets

The labeled positions are defined in **Table 16** and **Table 17**.

Table 16 Standalone turret labels

Position	Label	Bottle/Vial
1 through 14	1 through 14	Sample vials
15	15 L2	Sample vial Layer 2 bottle
16	16 L3	Sample vial Layer 3 bottle
17	W	Waste bottle
18	B	Solvent B bottle
19	A	Solvent A bottle

Table 17 Transfer turret labels

Position	Label	Bottle/Vial
1	L1	Dedicated vial transfer position A Layer 1 bottle
2	L2	Configurable vial transfer position B Layer 2 bottle
3	L3	Configurable vial transfer position C Layer 3 bottle

Table 17 Transfer turret labels (continued)

Position	Label	Bottle/Vial
4 and 5	WB	Waste B1 - B2 bottles
6 through 8	WA	Waste A1 - A3 bottles
9 through 12	B - B4	Solvent B1 - B4 bottles
13 through 18	A - A6	Solvent A1 - A6 bottles

Changing the turret type changes the choices available for solvent and waste bottle configuration.

To change your turret, use the following instructions for proper replacement.

1. Remove all vials from the turret.
2. Unplug the injector cable and place the injector tower on a parking post.
3. Open the injector door.
4. Remove the syringe. See **"Removing a Syringe"** on page 197.
5. While holding the turret in place with your hand, completely loosen the three T-10 Torx screws that fasten the turret cap to the motor hub.
6. Remove the turret cap.
7. Rotate the turret to the home position (with the turret injector opening facing the injector carriage).
8. Lift the turret off of the motor hub, then slide out. Avoid contact with the injector tower when removing the turret.

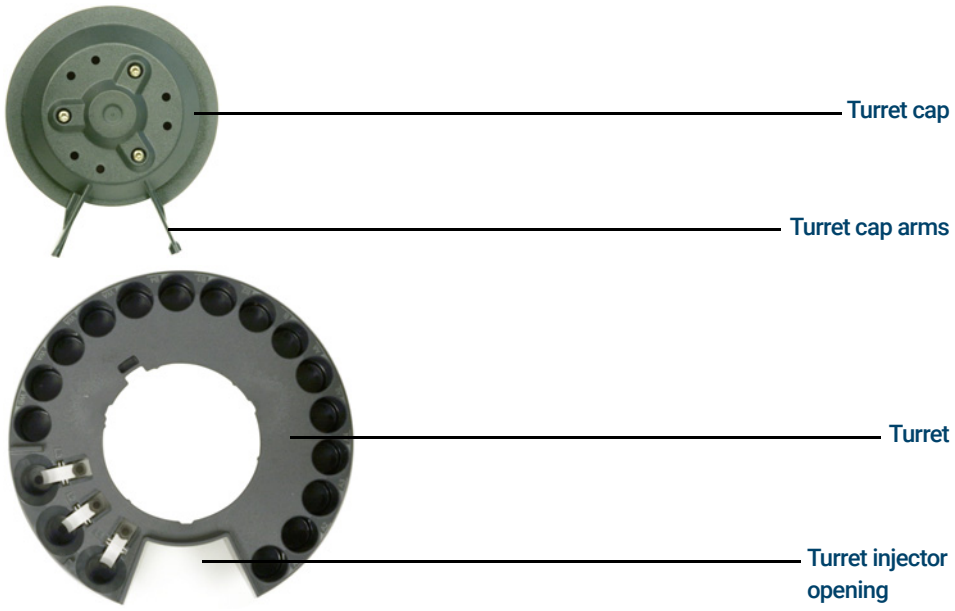

Figure 75. Removing the turret

9 Rotate the motor hub so the tabs on the motor hub face outward.

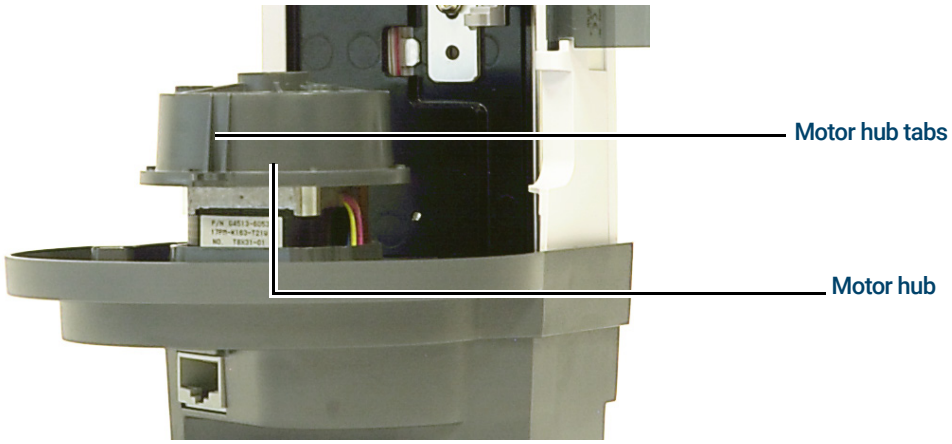

10 Reinstall the turret. Align the inner groove on the turret with the motor hub tabs, then slide the turret onto the motor hub. The turret should sit flat on the hub.

11 Reinstall the turret cap. Align the turret cap arms with the turret injector opening and place the turret cap in place.

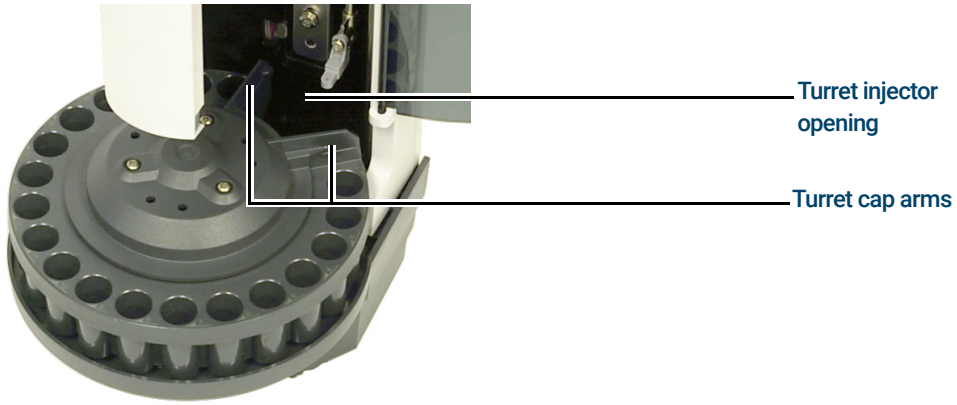

12 Tighten the three T-10 Torx screws.

13 Install the syringe. See "Installing a Syringe" for more information.

14 Close the injector door.

15 Remove the injector tower from the parking post and install the injector on the mounting post. See "Installing the G4513A Injector" for details.

16 Plug in the injector cable.

17 When powered on, the injector verifies the turret type. A fault light will show if the turret is not installed correctly.

18 Align the injector. See **"Aligning the Injector"** on page 211 for details.

19 If you installed a transfer turret and are using a sample tray, then you must calibrate your ALS system. See **"Calibrating the ALS System"** on page 214 for details.

Adapting for Cool On-Column Injection

The 7693A injectors can inject samples directly into 250-mm, 320-mm, and 530-mm columns in GCs with a cool-on-column inlet.

When performing cool on-column injections, the injector:

- Slows the carriage speed so the overall injection time increases to 500 milliseconds.
- Lowers the tip of the syringe needle an additional 19 mm into the column.

To adapt the injector and GC for cool on-column use, follow these steps:

1. If necessary, remove the current syringe from the injector. See **"Removing a Syringe"** on page 197 for more information.
2. If necessary, remove the injector from the mounting post and unplug the injector cable. If desired, park it on a parking post.
3. Select the on-column syringe needed for the column size. See your GC operating documentation, and the Agilent web site (**www.agilent.com**) for a list of parts.
4. Replace the needle support foot (G4513-40525) with the supplied on-column foot (G4513-40529). See **"Replacing the Needle Support Foot"** on page 202 for more information.
5. Install the on-column syringe. See **"Installing a Syringe"** on page 194 for more information.
6. Prepare the GC inlet. See your GC operating documentation for instructions.
   - Check your needle to column size.
   - Verify that the insert matches the needle size.
   - If necessary, replace the septum.

   For a list of other consumables needed to perform these injections, see your GC operating documentation.
7. Plug in the injector cable.
8. Install the injector on the mounting post. See "Installing the G4513A Injector" for details.

Replacing the Needle Support Foot

You must use either the standard needle support foot (**Figure 75**) or the on-column needle support foot depending on the type of injection. (The large volume syringe carriage uses the standard needle support foot.)

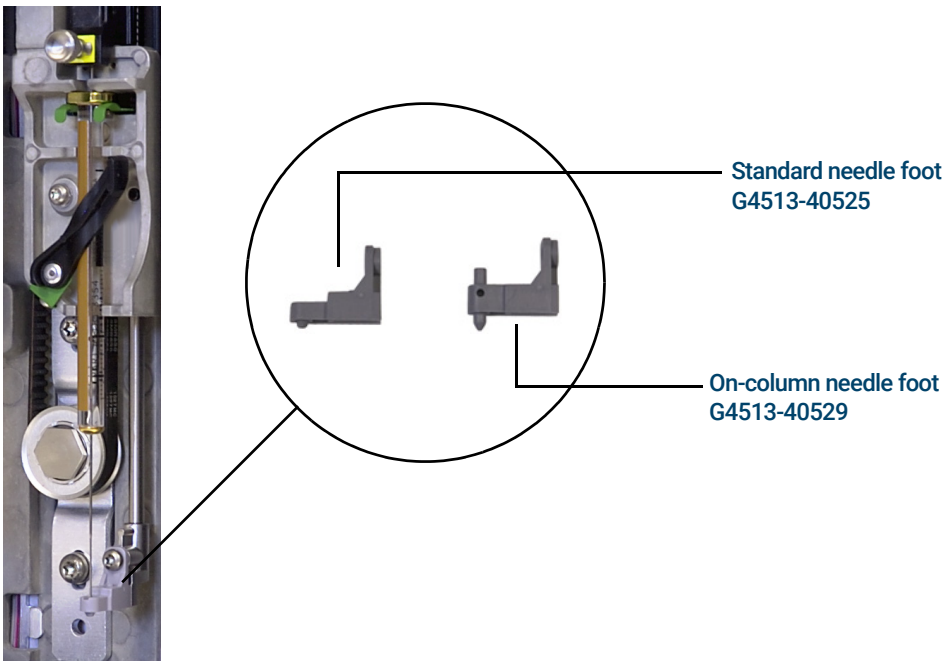

Figure 76. Replacing the needle support foot

Replace the needle support foot when you change injection types or when the support foot shows signs of wear:

1. Open the injector door.
2. Remove the syringe. See **"Removing a Syringe"** on page 197 for details.
3. Slide the syringe carriage up to the top position.
4. Completely remove the T-10 Torx screw from the support foot. Be careful to not let the screw fall into the turret assembly.
5. Slide off the support foot.
6. Slide on the new support foot.
7. Replace the T-10 Torx screw and tighten.
8. Install the appropriate syringe. See **"Installing a Syringe"** on page 194 for details.
9. Close the injector door.
10. Align the injector. See **"Aligning the Injector"** on page 211 for details.

Adapting for Syringes Over 100 µL

The injectors can perform enhanced sample handling injections using syringes over 100 µL. To adapt the injector and GC for enhanced sample handling injections, follow these steps:

1. If necessary, remove the current syringe from the injector. See **"Removing a Syringe"** on page 197 for details.
2. Replace the standard syringe carriage assembly with the G4521A Enhanced Sample Handling Syringe Carriage assembly. See **"Replacing the Syringe Carriage Assembly"** on page 204 for details.
3. Install the syringe needle support foot supplied with the G4521A Large Volume Syringe Carrier. See **"Replacing the Needle Support Foot"** on page 202 for details.
4. Install the appropriate syringe. See **"Installing a Syringe"** on page 194 for details.
5. If necessary, reinstall the injector on the GC. See "Installing the G4513A Injector" for details.
6. Align the injector. See **"Aligning the Injector"** on page 211 for details.
7. If you have a sample tray, calibrate the ALS system. See **"Calibrating the ALS System"** on page 214 for details.

Replacing the Syringe Carriage Assembly

Use the standard syringe carriage assembly (G4513-67570) (**Figure 77**) for injections up to 100 µL, and the G4521A Enhanced Sample Handling Syringe Carriage (G4521-63000) (**Figure 78**) for injections over 100 µL.

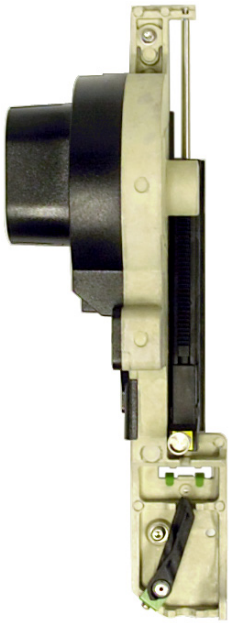

Figure 77. Standard syringe carriage assembly (G4513-67570)

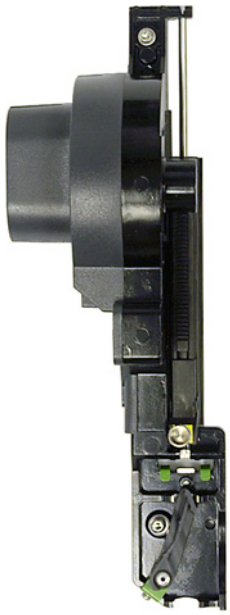

Figure 78. Enhanced Sample Handling syringe carriage assembly (G4521-63000)

To replace the syringe carriage assembly:

1. Remove all vials and bottles from the turret, and disconnect the injector cable from the GC.
2. If desired, remove the injector from the mounting post and mount the injector tower on a parking post.
3. Open the injector door.
4. Remove the syringe. See **"Removing a Syringe"** on page 197 for details.
5. Remove the turret. See **"Changing the Turret"** on page 198 for details.
6. Slide the syringe carriage assembly down until the assembly cable is accessible below the tower casing, and detach the cable from the assembly.
7. Completely loosen and remove the T-10 Torx screw at the top of the syringe carriage assembly.

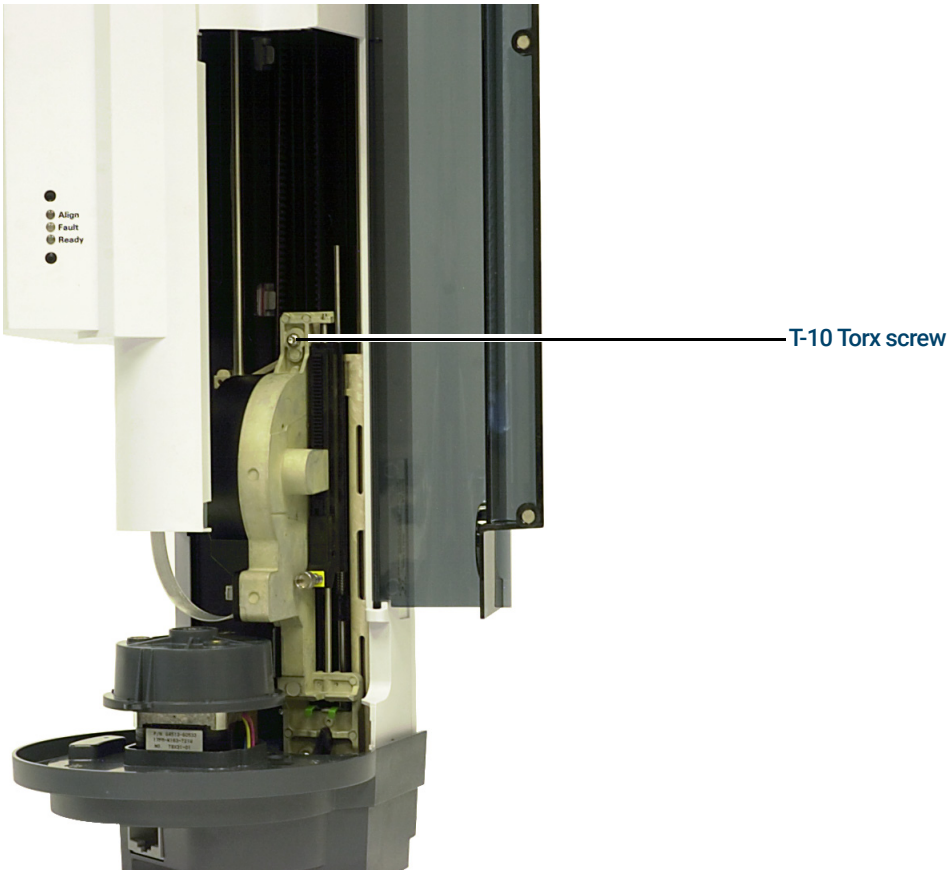

8 Slide the syringe carriage assembly completely up until the flange and latch are accessible.

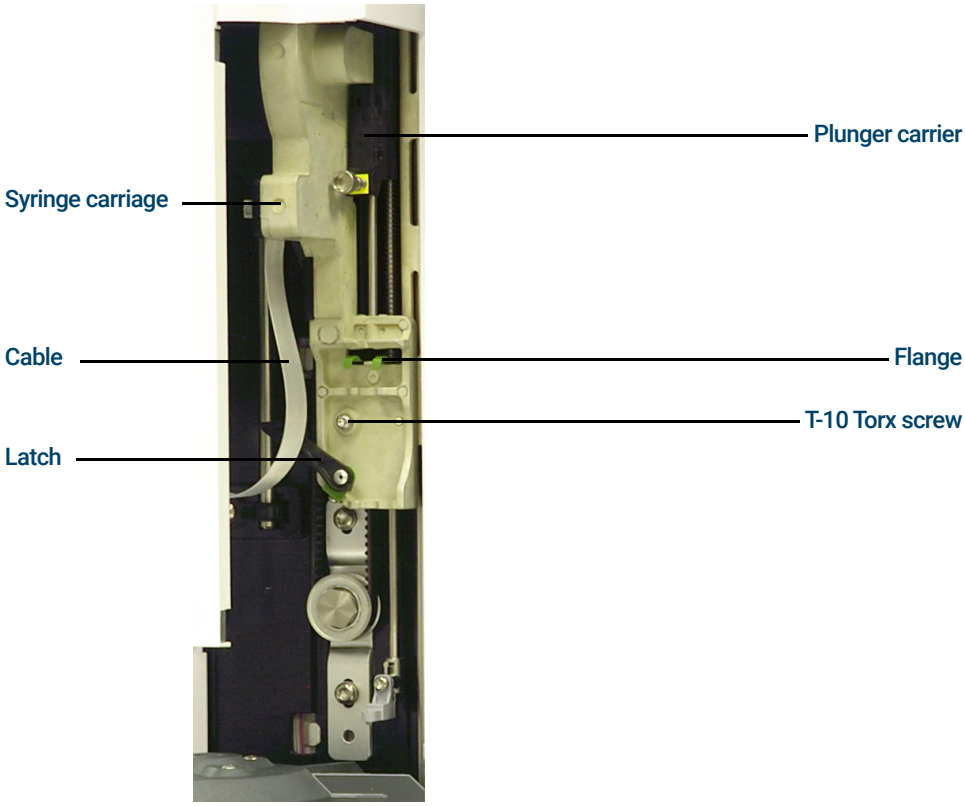

Figure 79. Removing the syringe carriage assembly

9 Completely loosen and remove the T-10 Torx screw above the syringe latch.

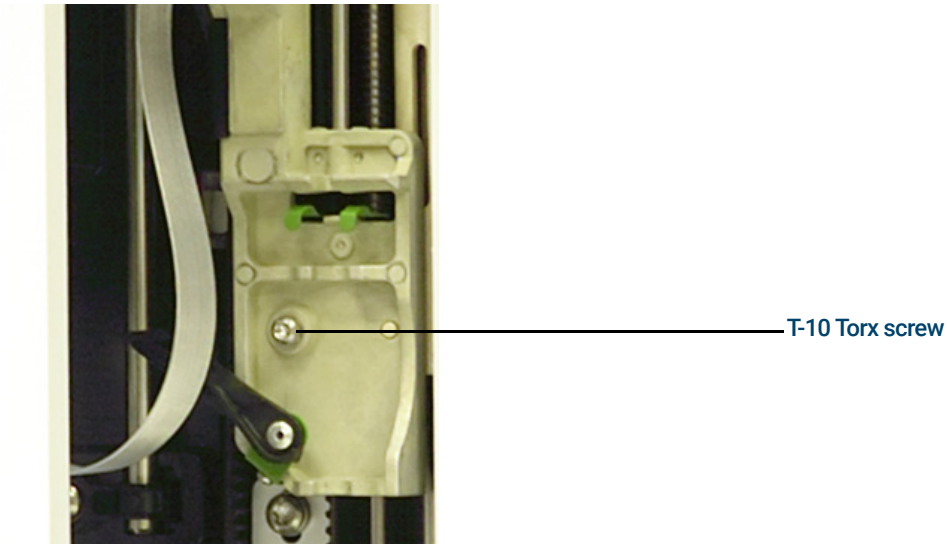

10 Carefully remove the syringe carriage assembly from the injector carriage.

11 Slowly position the replacement syringe carriage assembly on the injector carriage. The syringe carriage assembly will hang in place when positioned correctly.

12 Completely tighten the T-10 Torx screw above the syringe latch.

13 Slide the syringe carriage assembly completely down until the cable input jack on the assembly is accessible below the injector casing.

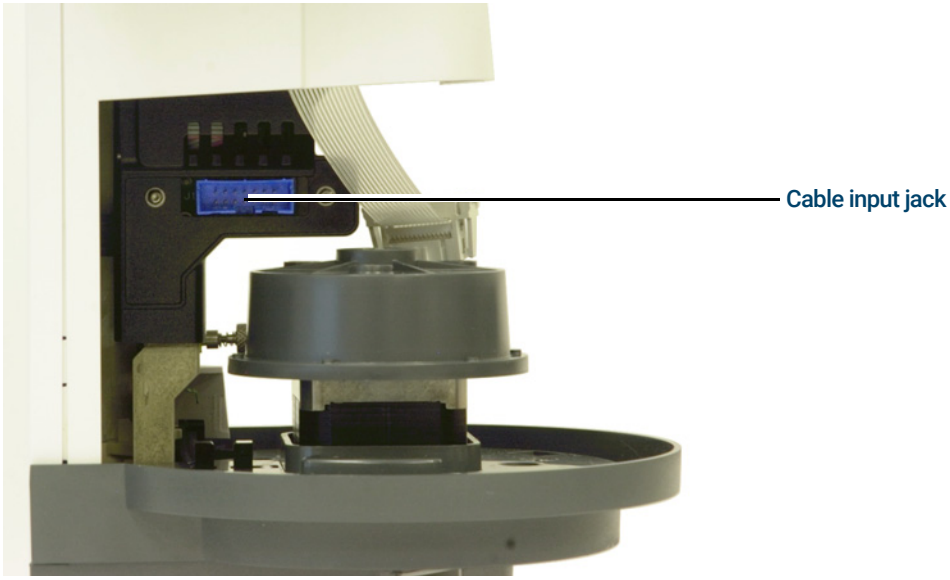

14 Completely tighten the T-10 Torx screw at the top of the syringe carriage assembly.

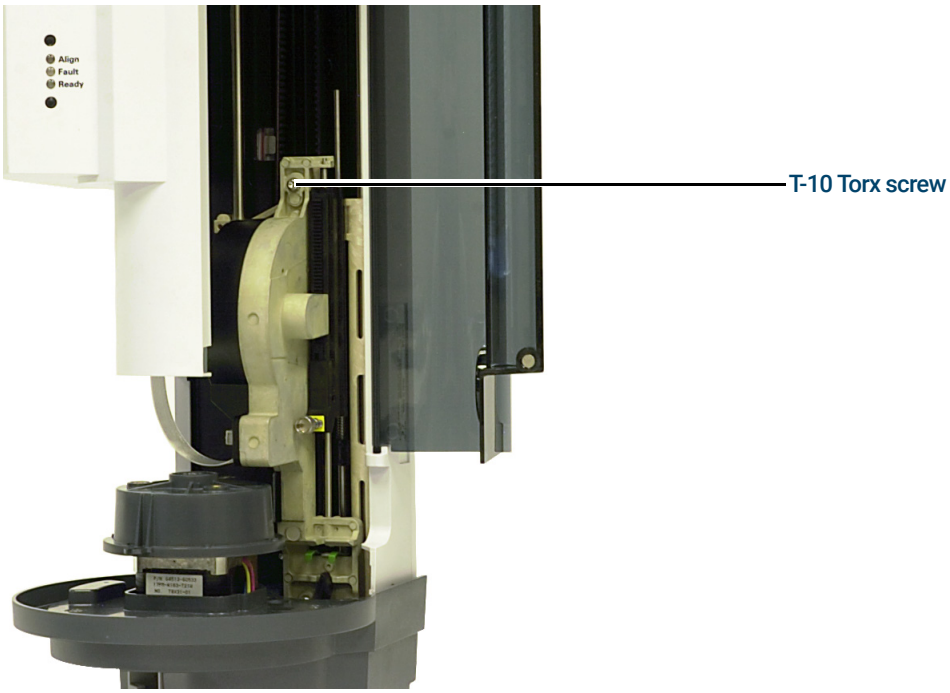

15 Connect the assembly cable to the syringe carriage assembly.

16 Slide the syringe carriage assembly completely up.

17 Make sure you have the appropriate needle support foot installed. See **"Replacing the Needle Support Foot"** on page 202 for details.

18 Install the turret. See **“Changing the Turret”** on page 198 for details.

19 Install the syringe. See **“Installing a Syringe”** on page 194 for details.

20 Close the injector door.

21 If necessary, plug in the injector cable and install the injector tower on the mounting post. See “Installing the G4513A Injector“ for details.

22 Align the injector. See **“Aligning the Injector”** on page 211 for details.

23 If you have a sample tray, calibrate the ALS system. See **“Calibrating the ALS System”** on page 214 for details.

Replacing a Syringe Needle

The stainless steel needles used for 250-µm and 320-µm injections must be inserted into a glass syringe barrel. Select the correct size needle for the column you will use.

Needles for 250-µm injections have silver-colored stops. Needles for 320-µm injections have gold-colored stops. See the Agilent web site (**www.agilent.com**) for a list of syringes and needles.

Table 18 On-column autosampler syringes

Volume (µL)	Description	Unit	Part No.
5	Removable needle, barrel only		5182-0836
	Stainless steel needle for 530 µm column	3/pk	5182-0832
	Stainless steel needle for 320 µm column	3/pk	5182-0831
	Stainless steel needle for 250 µm column	3/pk	5182-0833
	Plunger button	10/pk	5181-8866

To insert a needle into a syringe barrel (**Figure 80**):

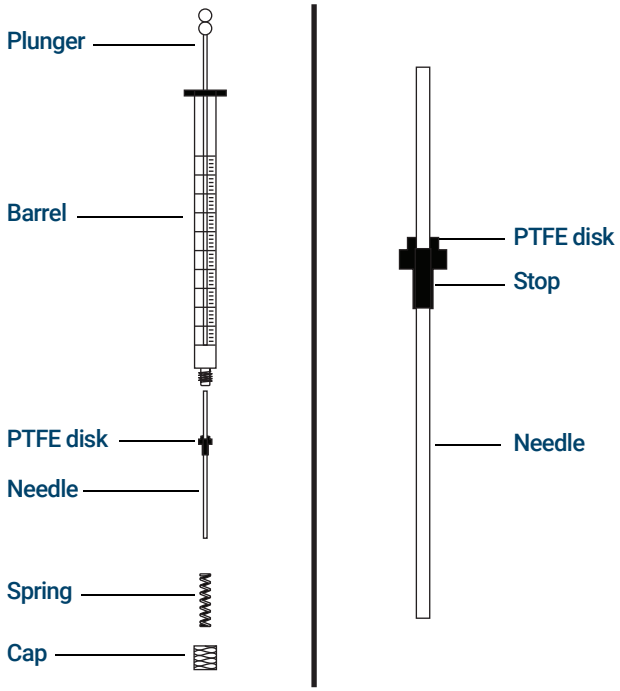

Figure 80. Syringe parts

1. Unscrew the syringe barrel cap and remove the spring.
2. Make sure the needle has a PTFE disk (**Figure 80**). If the syringe barrel does not have the PTFE disk, use the instructions in the syringe box to wrap the needle yourself.
3. Slide the spring and the cap down over the needle.
4. Insert the needle into the syringe barrel.
5. Screw the cap back on the syringe barrel.

Aligning the Injector

This section explains how to perform the injector alignment procedure. The injector has been factory-aligned prior to shipment. The alignment procedure should only be run if the injector hardware configuration has changed or if the Align Mode light comes on.

NOTE

Agilent does not recommend performing this procedure unless the Align Mode light turns on. It is not necessary to align the turret after changing turrets.

If the top, orange Align Mode light is on, the injector will not operate again until the alignment procedure has successfully completed.

To align the injector:

1 Remove all vials from the turret.

2 Open the injector door and remove the syringe. See **"Removing a Syringe"** on page 197 for details.

3 Close the injector door.

4 Use a long, narrow object to press the recessed Alignment button above the indicator lights. Avoid contact with anything behind or around the button inside the recessed hole (**Figure 81**).

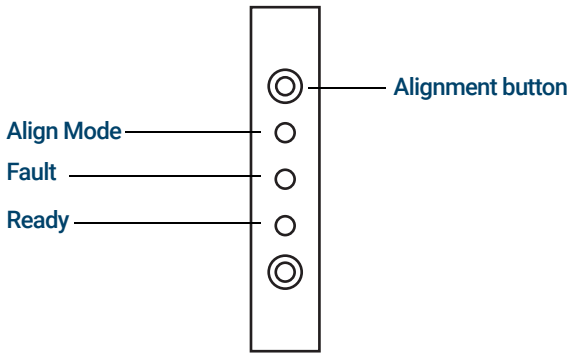

Figure 81. Aligning the injector

The orange Align mode light is on during the alignment procedure:

a The turret rotates to verify that the syringe was removed, then rotates to determine what type of turret is installed.

b The syringe carriage moves all the way down, homes, then moves back up again.

c The syringe carriage steps down until it touches the turret. This sets its position relative to the turret.

d The plunger moves to calibrate stops.

e The syringe carriage moves down and the turret rotates to set its position relative to the syringe carriage position.

NOTE

If any of these steps fail, the process will halt and the fault light will shine. If it halts at step b, confirm that the turret is installed correctly and press the Alignment button again. If it fails again, unplug the injector, reconnect it, and try one more time before obtaining Agilent service.

5 When the injector stops and the green Ready light is on, the calibration is finished.

If this alignment was user-initiated (orange Align Mode light was off before pressing the Alignment button) and alignment fails, unplug the injector, reconnect it, and it will reset to the old alignment values.

6 Open the injector door and install the syringe. See **"Installing a Syringe"** on page 194 for details.

7 Close the injector door.

Aligning the Sample Tray

This section explains how to perform the sample tray alignment procedure. The sample tray has been factory-aligned prior to shipment. The alignment procedure should only be run if the Align Mode light comes on.

NOTE

Agilent does not recommend performing this procedure unless the Align Mode light turns on or if Agilent support requests it to be performed.

If the left, orange Align Mode light is on, the sample tray will not operate again until the alignment procedure has successfully completed.

To align the sample tray:

1 Use a long, narrow object (such as a pen tip) to press the recessed Alignment button to the left of the indicator lights. Avoid contact with anything behind or around the button inside the recessed hole (**Figure 82**).

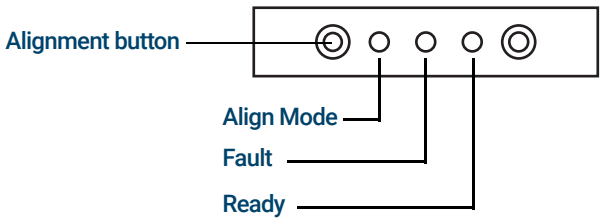

Figure 82. Align the sample tray

The orange Align mode light blinks during the following steps:

a The gripper power calibrates.

b The gantry calibrates the X, Y, and Z home and span settings.

c The gantry is zeroed to calibration position (X, Y, Z).

NOTE

If any of these steps fail, the process will halt. Press the Alignment button again. If it fails again, unplug the sample tray, reconnect it, and try one more time before obtaining Agilent service.

2 When the sample tray stops in the Home position and the green Ready light is on, the calibration is finished.

If this alignment was user-initiated (orange Align Mode light was off before pressing the Alignment button) and alignment fails, unplug the sample tray, reconnect it, and it will reset to the old alignment values.

Calibrating the ALS System

The ALS system calibration process aligns the sample tray with the injector turret position so vial transfers occur without incident. Calibration should be performed if a calibration does not exist, and also as a routine maintenance procedure.

Calibrating the ALS system is recommended if any ALS components are moved.

To calibrate your ALS system:

1 Place the calibration vial (G4514-40588) in tray position 1 (**Figure 83**).

Figure 83. Tray position 1

2 Remove any vials from transfer turret positions L1, L2, and L3 for all installed injectors (**Figure 84**).

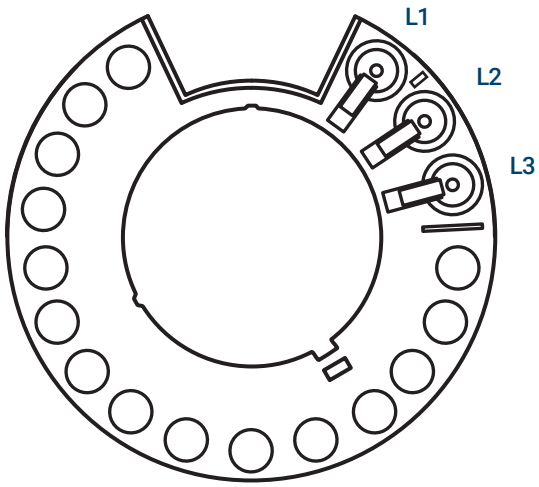

Figure 84. Transfer turret positions L1, L2, L3 (top view)

3 Start the ALS system calibration:

- On a 7890A GC, use the GC front keypad and select **[Options] Calibration > ALS > Start Calibration**.
- On a 6890 Series GC, use the GC front keypad and select **[Options] Calibration > Sample tray > Start Calibration**.

- On an 8890 GC or an Intuvo 9000 GC, use the GC touchscreen (shown below) or browser interface. For the 8860 GC, use the browser interface. Go to **Settings > Calibration > ALS**, and select **Start Calibration**:

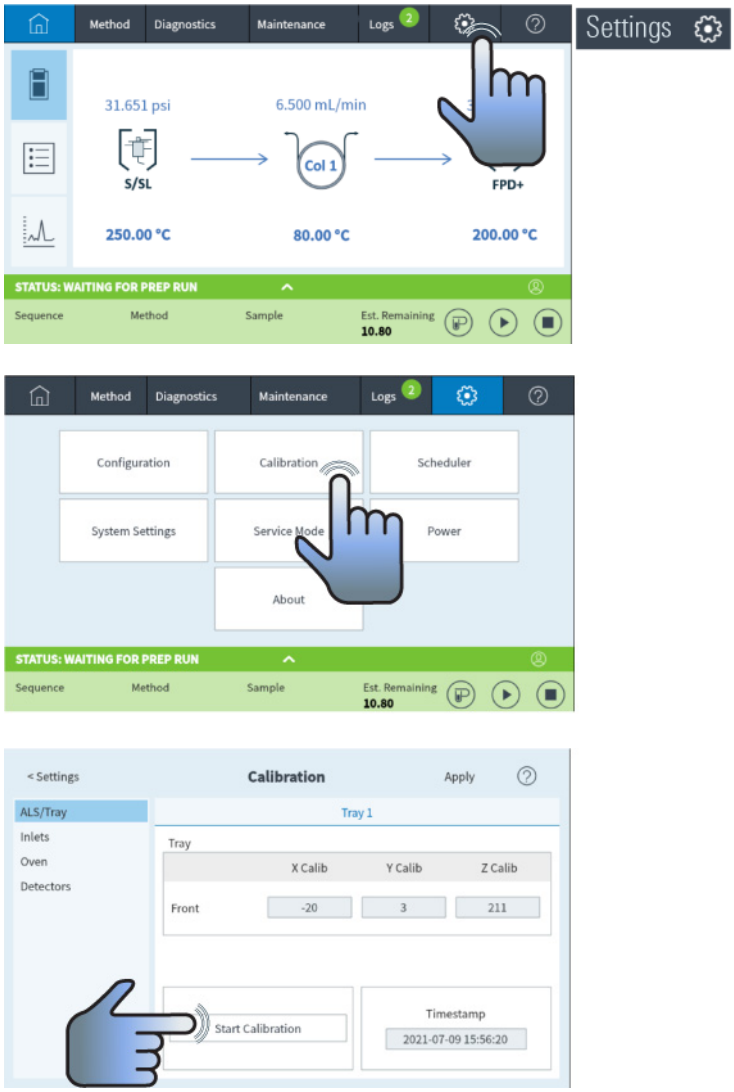

The following calibration process will occur for all installed injectors:

a The tray assesses the turret alignment by placing the calibration vial into turret position L1 and returning to sample tray position 1.

b The tray tests the vial height and turret position by using the alignment tab between positions L1 and L2 on the transfer turret.

c The tray verifies the turret alignment by placing the calibration vial into turret position L1 and returning it to sample tray position 1.

4 When the calibration process is complete, the green Ready status light will come on and the gantry will stop in the Home position (**Figure 70** on page 193).

Remember to replace any vials that were moved for the calibration process.

Replacing Power Fuses in the G4517A ALS Controller

The G4517A ALS Controller uses two replaceable fuses to protect its electronics from line voltage problems. If blown, replace them as described below.

CAUTION

Fuses blow for a reason. The most likely cause at first installation is an incorrect power configuration (see "Verify the power configuration" on page 87). Otherwise, normal operation should not blow the fuses. If the fuses blow frequently, identify and correct the problem

1. Turn off the controller.
2. Remove the power cord.
3. Remove the fuse holder module using a small, flat-bladed screwdriver. (See **"Installing the G4526A/G4517A ALS Controller (6890A GCs)"** on page 84 for details.)
4. Pull the tab out using a small, flat-bladed screwdriver.
5. Remove the fuses.
6. Install the new fuses (**Figure 85**).

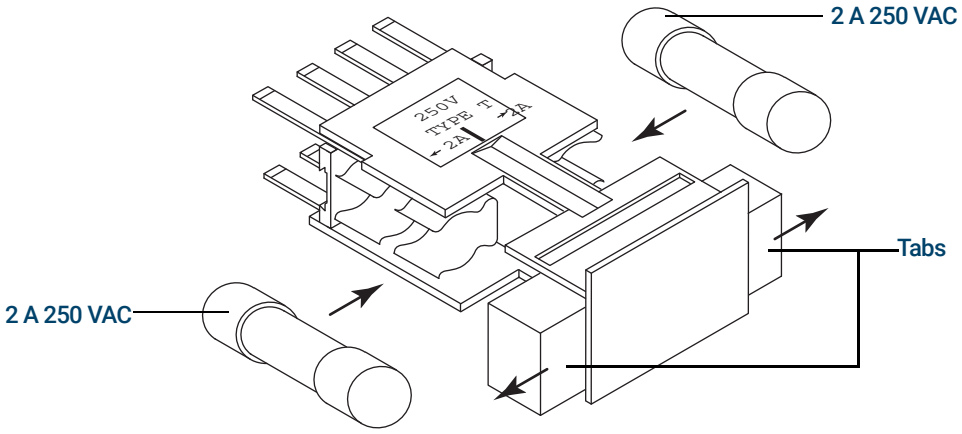

Figure 85. Proper fuse orientation

7. Push the tabs closed.
8. Reinstall the fuse holder module, making sure the orientation is correct for the line voltage input. See **"Installing the G4526A/G4517A ALS Controller (6890A GCs)"** on page 84 for details.

12 Faults and Errors

Faults **220**

Faults **220**

Sample tray faults **221**

Error Messages **223**

Sometimes things do not work as expected. In most cases, the nature of the problem is signaled either by status lights on the injector and sample tray or by error messages on the GC display. If this happens, use this chapter to discover the probable cause and the corrective action to take.

Faults

Injector faults

The injector status is indicated by the three lights on the front injector panel (**Figure 86**).

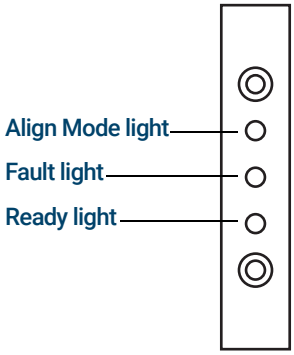

Figure 86. G4513A Injector status lights

During normal operation, the green Ready light is on. If the injector is busy, the green Ready light is flashing.

If another combination of lights is on, an error has occurred.

Use the information in this chapter to try to solve or identify the problem before obtaining Agilent service.

Table 19 Injector status lights

Lights	Possible cause	Action
All lights are off.	• The line voltage to the GC is off. • The injector cable or connection to the GC is bad. • Your GC requires service.	**1** Verify the injector is properly connected to the GC. **2** Check the power source for your GC. **3** Obtain Agilent service.
Fault light is on.	• The injector door is open. • Injector is not properly mounted to the GC.	**1** Ensure that the injector door is closed. **2** If the fault light stays on, obtain Agilent service. **3** Ensure that the injector is mounted properly. For more information, see **"Installing the G4513A Injector"** on page 51. **4** Ensure the correct mounting post is installed. See **"Installing the G4513A Injector"** on page 51. **5** If the Fault light stays on, obtain Agilent service.
Fault light is flashing two times.	• Syringe error.	**1** Re-install or replace the syringe.
Fault light is flashing three times.	• Turret error.	**1** Re-install the turret.

Table 19 Injector status lights (continued)

Lights	Possible cause	Action
Fault light is flashing four times.	• Plunger error.	
Align Mode light is on.	• The system was not initialized. • There is an injector memory error.	1 Verify the turret is properly installed. See **"Changing the Turret"** on page 198. 2 Perform the alignment procedure to initialize the system. See **"Aligning the Injector"** on page 211. 3 If alignment fails, obtain Agilent service.
Align Mode light is flashing.	• Customer pushed the align mode button.	1 The alignment and calibration process is currently underway. Let the process finish.
All lights are on.	• There is a board failure. • There is a firmware revision conflict.	1 Check all cable connections. 2 Turn the instrument off, then on again. 3 If the lights remain on, obtain Agilent service.
All lights are flashing.	• Wrong driver board installed.	1 Install the correct driver board. 2 Check firmware revision. 3 If lights remain flashing, obtain Agilent service.

Sample tray faults

The sample tray status is indicated by the three lights on the front panel (**Figure 87**).

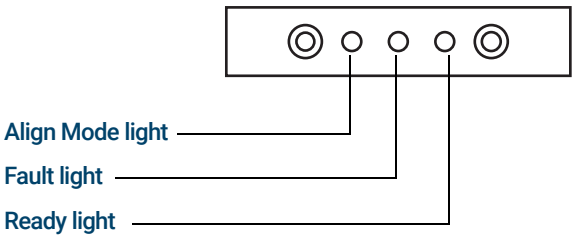

Figure 87. G4514A Sample Tray status lights

During normal operation, the green Ready light is on. If the sample tray is busy, the green Ready light is flashing.

If another combination of lights is on, an error has occurred.

Use the information in this chapter to try to solve the problem before obtaining Agilent service.

Table 20 Tray status lights

Lights	Possible cause	Action
All lights are off.	• The device is unplugged.	
Fault light is on.	• System fault.	

Table 20 Tray status lights (continued)

Lights	Possible cause	Action
Fault light is flashing one time.	• A vial is lost or missing.	
Fault light is flashing two times.	• X-axis error.	
Fault light is flashing three times.	• Y-axis error.	
Fault light is flashing four times.	• Z-axis error.	
Fault light is flashing five times.	• Gripper error.	
Align Mode light is on.	• The system was not initialized. • There is a tray memory error.	**1** Perform the alignment procedure to initialize the system. See **"Aligning the Injector"** on page 211. **2** If alignment fails, obtain Agilent service.
Align Mode light is flashing.	• Customer pushed the align mode button.	**1** The alignment and calibration process is currently underway. Let the process finish.
All lights are on.	• There is a board failure. • There is a firmware revision conflict.	**1** Check all cable connections. **2** Turn the instrument off, then on again. **3** If the lights remain on, obtain Agilent service.
All lights are flashing.	• Wrong driver board installed.	**1** Install the correct driver board. **2** Check firmware revision. **3** If lights remain flashing, obtain Agilent service.

Error Messages

Table 21 lists the sampler error messages as reported on the GCs. Error messages are not displayed on 6890A or 6890 Plus GCs. If you receive an error message that is not shown below, record it. Make sure that your GC is properly configured and that your sample vials and equipment match your method and/or sequence. If the problem continues, report your error message to Agilent service.

Table 21 Error messages

Message	Probable cause	Suggested action
Bottle in gripper	• The sample vial was not delivered properly and stayed in the tray gripper.	1 Remove the vial and return it to its position in the tray. 2 Ensure that the vial racks are snapped into place. 3 Ensure that the injector is plugged into the correct connector on the back of the GC. For 6890, ensure it is configured properly. See **"Connecting the Cables"** on page 62. 4 Check the **deliver to** location for the vial and verify that the location is empty and free from obstructions. 5 Make sure that the injector is upright/vertical on the GC. 6 Restart the sequence. 7 If the error occurs again, obtain Agilent service.
Front (or Back) door open or Injector not mounted		• See **"Faults"** on page 220.
Front (or Back) injector com error	• There is a communications error between the injector and the GC.	• Obtain Agilent service.
Front (or Back) injector incomplete injection	• The syringe needle is bent. • The plunger or syringe carriage is operating incorrectly during injection.	1 See **"Correcting Syringe Problems"** on page 235. 2 Remove the syringe from the injector and check the plunger for stickiness or binding. Replace the syringe if necessary. 3 Restart the sequence. 4 If the error occurs again, obtain Agilent service.
Front (or Back) injector reset	• There is an interruption in the power supply from the GC.	• Obtain Agilent service.
Front (or Back) plunger error	• The syringe plunger is sticking or not securely connected to the plunger carrier. • The plunger solenoid is binding. • The plunger carrier encoder is inoperable.	1 Remove the syringe and check it for plunger stickiness or binding. Replace the syringe if necessary. For more information, see **"Inspecting a Syringe"** on page 152. 2 Check the viscosity of the sample against the viscosity parameter. Reset the viscosity parameter if necessary. 3 Restart the sequence. 4 If the error occurs again, obtain Agilent service.

Table 21 Error messages (continued)

Message	Probable cause	Suggested action
Front (or Back) syringe error	• The syringe carriage motor is defective. • The syringe is not currently installed or is an incorrect type. • The syringe carriage sensor is inoperable.	1 Ensure the syringe is installed correctly. For more information, see **"Installing a Syringe"** on page 153. 2 Ensure the syringe meets specifications. 3 If the syringe needle is bent, see **"Correcting Syringe Problems"** on page 235. 4 Restart the sequence. 5 If the error occurs again, obtain Agilent service.
Front (or Back) turret error	• Something has interfered with the turret rotation. • The turret motor/encoder assembly is inoperable. • The turret type was changed while the power was on and the turret alignment procedure was not performed. • Turret is loose.	1 Clear any obstructions. 2 Check the Align Mode light. If it is on, perform the alignment procedure. See **"Aligning the Injector"** on page 211. 3 Tighten the top of the turret. 4 If the error occurs again, obtain Agilent service.
Injector not present	• There is a board failure in the injector or GC. • The injector cable is bad or not securely connected to the GC. • There is a cable failure in the GC. • Your method specifies an incorrect injector location (method mismatch).	1 Make sure that the injector-to-GC cable connection is secure. 2 Check your method to make sure it uses the appropriate injector location. 3 If the error remains, obtain Agilent service.
Injector offline	• There is a board failure in the injector or GC. • The injector cable is bad or not connected. • There is a cable failure in the GC.	1 Make sure that the injector to GC cable connection is secure. 2 If the error remains, obtain Agilent service.
No Bar Code Reader	• Bar Code Reader cable not securely connected. • Bar Code Reader is defective. • Tray is defective.	1 Ensure the Bar Code Reader cable connection is secure. 2 If the problem continues, obtain Agilent service.
No bottle in gripper	• The sample vial was not found by the gripper. • The gripper could not grasp the vial. • The vial was dropped during transfer to or from the turret. • The sensor in the gripper is defective. • The vial does not meet specifications.	1 Make sure that the sample vials are in the locations specified by the sequence. 2 Make sure that the sample vials meet recommended specification. 3 If you are using adhesive labels, verify that the labels are properly installed. See **"Label a sample vial"** on page 161. 4 If the error recurs frequently, obtain Agilent service.
Tray not present	• There is a board failure in the tray or GC. • The tray cable is bad or not connected between the GC and tray. • There is a cable failure in the GC.	1 Make sure that the tray cable connection is secure. 2 Replace the tray cable. 3 If the error remains, obtain Agilent service.
Tray offline	• There is a board failure in the tray or GC. • The tray cable is bad or not connected. • There is a cable failure in the GC.	1 Make sure that the tray to GC cable connection is secure. 2 Replace the tray cable. 3 If the error remains, obtain Agilent service.

Table 21 Error messages (continued)

Message	Probable cause	Suggested action
Invalid sequence	• The sequence is set up for the wrong injection device. • Hardware required by the sequence is not installed and configured. • The GC configuration was changed during sequence execution. • The injector cable is bad or not connected properly.	1 Make sure that the connection to the GC is secure. 2 Verify the sequence parameters against the GC configuration. 3 If the error remains, obtain Agilent service.
No injector	• The cabling connection to the GC became loose during a run. • An injector board or GC board failed during a run.	1 Make sure that the connection to the GC is secure. 2 If the error remains, obtain Agilent service.
Prerun >10 min	• The GC is Not Ready.	• Check for Not Ready and other GC messages to determine the cause.
Sampler Offline (6890A/Plus GCs Only)	• You are attempting to upload or download an ALS workfile to an ALS system that is not powered on or connected.	• Make sure that the connection to the GC is secure.

13 Troubleshooting

Symptom: Variability 228

Symptom: Contamination or Ghost Peaks 230

Symptom: Smaller or Larger Peaks Than Expected 231

Symptom: Sample Carryover 233

Symptom: No Signal/No Peaks 234

Correcting Syringe Problems 235

Correcting Sample Vial Delivery Problems 236

The information in this chapter will assist you in keeping the sampler running smoothly.

If the chromatogram is not satisfactory, clearly something is wrong. Use this chapter to determine the probable cause and, in many cases, the cure for the problem.

This chapter deals only with sampler-related problems. However, many of the symptoms described here could also come from other sources, particularly the stability of the GC temperature and its gas supplies.

If you cannot correct the problem, obtain Agilent service.

Symptom: Variability

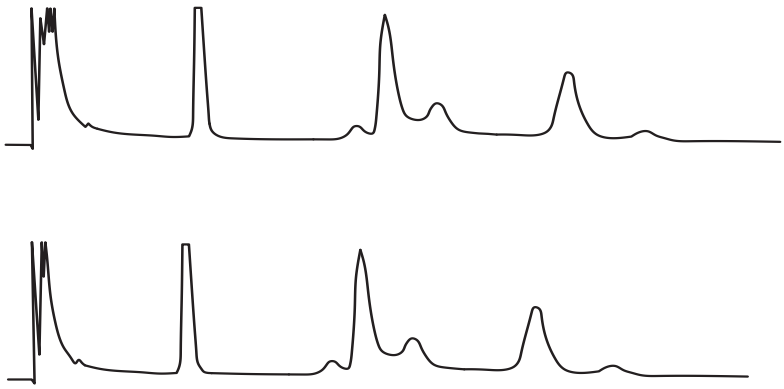

Figure 88. Retention times or areas are not reproducible

Table 22 Variability problems

Possible cause	Action
Inlet septum is leaking.	If the septum is leaking, replace it. If the septum you replaced experienced less than 200 injections, check for the following possible problems to prevent premature septum failure: • The septum retainer nut is too tight. • The syringe needle is not straight. • The syringe is not installed correctly.
Syringe is worn or dirty.	If the syringe looks dirty or the plunger is sticking, clean the syringe with an appropriate solvent or follow the syringe manufacturer's cleaning instructions.
Sample volume is too low or too high.	Check sample level. If the sample vials are not filled correctly, evaporation or contamination may affect the analysis. The sample level hold will be approximately half the volume of the vial. See **"Fill a sample vial"** on page 162.
Vial caps are loose.	Check vial caps. If you can turn the vial crimp cap by hand, they are too loose. Loose caps may cause volatile samples to change concentration over time. See **"Vial crimping visual checks"** on page 165. Screw caps, if not sufficiently tight, can come loose in the mixer and even come off.
Sample is not stable.	Check the sample stability. Some samples change with heat or ultraviolet light. There are several ways to reduce changes to unstable samples: • Use the vial racks to cool the sample. • Use amber sample vials. • Store the samples in a protected environment.
Sample size varies.	Install a new syringe. If the sample size varies, the syringe is probably not precise or the plunger is worn. Variation may be due to syringes with removable needles because of dead volume or needle-to-needle variation.

Table 22 Variability problems (continued)

Possible cause	Action
Air bubbles are in the needle.	If air bubbles are in the needle, user variable speed and a sample draw speed slow enough to avoid bubble formation. See **"Setting the Injector Parameters"** on page 138. If this does not help and the sample is viscous, try the following: • Increase the viscosity delay time. • Use the vial racks to warm the sample. • Dilute the sample in an appropriate low-viscosity solvent.

Symptom: Contamination or Ghost Peaks

Table 23 Contamination or ghost peak problems

Possible cause	Action
Vial cap septum is dissolving in solvent. Ghost peaks sometimes appear when small pieces of septum material dissolve in the sample. Make several blank runs to determine the presence or absence of the ghost peaks.	Check for the following: • Be sure the vial septum is flat. If the vial septum is not flat, the needle tends to core the septum and drop pieces into the sample. See **"Vial crimping visual checks"** on page 165. • Check the needle. If the syringe needle has burrs, it could cut pieces of the septum and push them into the sample. • Check the vial septum. If the vial septum is not resistant enough to the solvent you are using, try a more resistant type.
Sample vials are contaminated.	Ghost peaks are sometimes caused by contaminated sample vials. Try new or clean vials to see if ghost peaks disappear. Store new vials in a contaminant-free location.
Inlet septum is giving off volatiles.	Make several blank runs with a small piece of aluminum foil backing the inlet septum. If the contamination peaks disappear, they were probably due to the septum. Try replacing the septum you usually use with another type.
Column is contaminated. High molecular weight samples that contain residues may cause the syringe, the inlet liner, or the first few inches of column to become contaminated.	Do the following: • Replace or clean and deactivate the inlet liner. • Examine the first few inches of a capillary column for foreign material by holding a light behind it. If possible, remove the contaminated section.
Sample is not stable.	Some samples change with heat or ultraviolet light. Check the sample stability. There are several ways to reduce the change: • Use the tray quadrant to cool the sample. • Use amber sample vials. • Store the samples in a protected environment.

Symptom: Smaller or Larger Peaks Than Expected

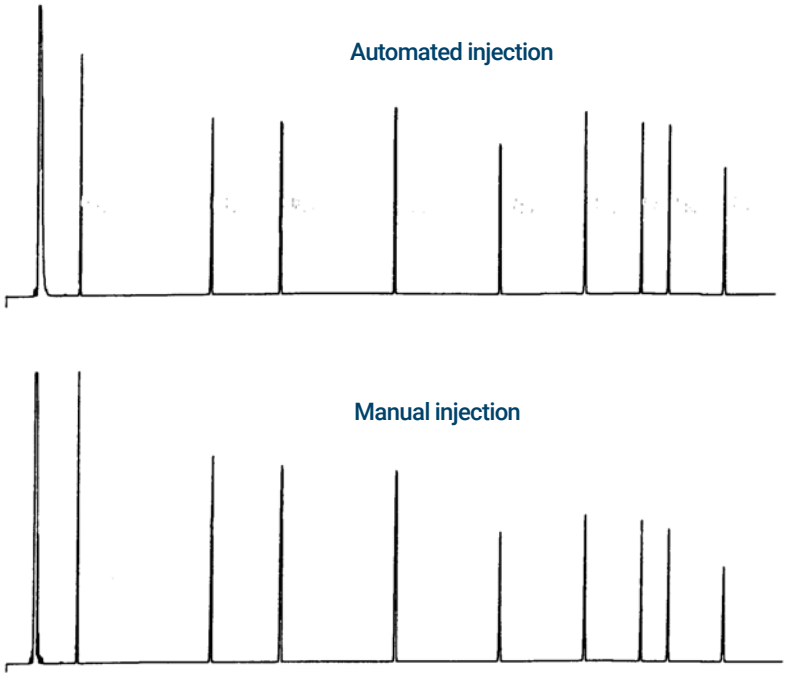

Figure 89. Smaller or larger peaks than expected

Table 24 Peak size problems

Possible cause	Action
You are comparing a chromatogram without needle fractionation against one with needle fractionation.	Check your injection mode. In the normal injection mode, the sampler uses fast injection to deliver a representative amount of the sample. Fast injection minimize needle fractionation. Chromatograms from manual injection or slower auto injection devices show higher levels of low molecular weight materials versus higher molecular weight materials because the volatiles boil out of the needle faster than the higher weight materials.
You are using a packed inlet and a 530-µm column.	Check your inlet. Capillary columns used with packed inlets have some inherent sample discrimination characteristics.
There is a leak in the GC system.	Replace the septum and check the fitting for leaks. If the leaking septum has experienced less than 200 injections. To prevent future premature failures, be sure that: • The septum retainer nut is not too tight. • The syringe needle is straight. • The syringe is installed correctly.
Sample is not stable.	Some samples change with heat or ultraviolet light. Check the sample stability. There are several ways to reduce the change: • Use the vial racks to cool the sample. • Use amber sample vials. • Store the samples in a protected environment.

Table 24 Peak size problems (continued)

Possible cause	Action
Vial caps are loose.	Check the vial caps. Loose vial caps can cause selective loss of lighter materials from a sample. The cap should not rotate easily if installed properly. See **"Vial crimping visual checks"** on page 165.

Symptom: Sample Carryover

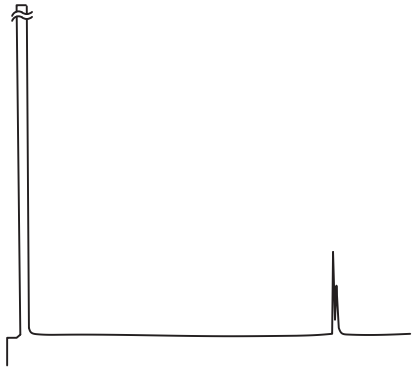

Figure 90. Blank run showing carryover peaks

Table 25 Carryover problems

Possible cause	Action
Number or type of washes is insufficient.	Check the run parameters for the number of sample and solvent washes. The number of washes needed depends on your application. See **"Sample Carryover"** on page 120.
You ran out of solvent.	Check the solvent bottles. If the solvent level is below 2.5 mL, the syringe cannot reach the solvent. Replace the remaining solvent with 4 to 4.5 mL of fresh solvent. See **"Preparing Solvent and Waste Bottles"** on page 168. Check the waste bottles. If the waste level is near the neck of the bottle, replace it with an empty bottle.
Syringe is worn or dirty.	If the syringe look dirty or the plunger is sticking, clean the syringe with an appropriate solvent or follow the syringe manufacturer's cleaning instructions. If the syringe seems worn, replace it.
Samples (vial-to-vial) are of immiscible types.	In this situation, the sample and solvent washes may not rinse the syringe properly. Increase the number of wash cycles or use a solvent that rinses a variety of sample types.

Symptom: No Signal/No Peaks

Table 26 Signal/Peak problems

Possible cause	Action
Syringe plunger is malfunctioning.	Verify that the syringe plunger is secured by the plunger screw. If the plunger screw is loose, tighten it. See**"Installing a Syringe"** on page 153. Check the syringe needle for plugging. If the syringe is plugged, replace or clean the syringe.
Sample level is too low in vial.	If there is no or very little sample in the vial, the needle may not be able to reach it. See **"Fill a sample vial"** on page 162. Alternately, you may edit your method to adjust the needle sampling depth. See Sampling offset in **"Setting the Injector Parameters"** on page 138.
Sample is viscous.	If the sample is viscous, try the following: • Increase the viscosity delay time. • Use the vial racks to warm the sample. • Dilute the sample in an appropriate low-viscosity solvent.

Correcting Syringe Problems

WARNING

When troubleshooting the injector, keep your hands away from the syringe needle. The needle is sharp and may contain hazardous chemicals.

Several things can cause syringe needles to bend. When you find one, check for the following conditions before installing a replacement:

- ☐ Was the syringe installed properly in the syringe carriage?
- ☐ Are you using the correct syringe type? Is the combined length of the syringe barrel and needle 126.5 mm? For more information, see **"Selecting a Syringe"** on page 150.
- ☐ Is the needle support foot clean? Remove any residue or septum deposits. For more information, see ***"Periodic Maintenance"*** on page 192.
- ☐ If performing a cool on-column injection, is the correct insert for your syringe installed in the cool on-column inlet? For more information, see **"Adapting for Cool On-Column Injection"** on page 201.
- ☐ Is the GC septum nut too tight? For more information, see your GC operating documentation.
- ☐ Is the septum of the crimp cap centered over the sample vial? For more information, see **"Vial crimping visual checks"** on page 165.
- ☐ Are the inside diameters of the sample vial, microvial insert, and vial cap septum at least 5 mm? For more information, see **"Preparing a Sample Vial"** on page 160.

Correcting Sample Vial Delivery Problems

When you find a mishandled sample vial, check:

- ☐ Are the vial caps installed correctly?
- ☐ Are there folds or wrinkles in the crimp cap, especially near the neck of the sample vial? For more information, see **"Preparing a Sample Vial"** on page 160.
- ☐ If you use labels on the sample vials, are they the correct size? For more information, see **"Label a sample vial"** on page 161.
- ☐ If you use labels on the sample vials, are they interfering with the gripper? For more information, see **"Label a sample vial"** on page 161.
- ☐ Are there any obstacles to the sample tray arm or injector turret motions? Remove any obstacles.
- ☐ Are the vial racks and turret in good condition? Clean any residue from the sample positions.
- ☐ Does the bottom of a sample vial touch the top of the turret? Does the side of a sample vial touch the side of the turret hole as the vial is raised or lowered? To calibrate the ALS system, see ***"Calibrating the ALS System"*** on page 214.

14 Replacement Parts

G4513A Injector **238**

G4514A Sample Tray **241**

G4517A ALS Controller (6890A GC Only) **243**

G4516A ALS Interface Board (6890 Plus GC Only) **244**

The following pages list the replacement parts for the 7693A ALS system. Also refer to the Agilent web site at **www.agilent.com** for the most up-to-date replacement part and firmware listings.

G4513A Injector

Table 27 and **Figure 91** list and show the replacement parts for the G4513A Injector module.

Table 27 G4513A Injector replacement parts

Item	Description	Part no.	Qty/Assy
1	Transfer turret	G4513-67730	1
2	Standalone turret	G4513-40532	1
3	Needle support insert - Standard	G4513-40525	1
4	Needle support insert - COC	G4513-40529	1
5	Dual parking post	05890-61525	1
6	Injector mounting post	G4513-20561	1
7	Injector module (new/exchange)	G4513A	1
8	Communication cable	G4514-60610	1
9	Syringe carriage, standard (for 1 to 100 uL syringes)	G4513-67570	
10	Syringe carriage, large volume injection (for 250 uL and 500 uL syringes)	G4521-63000	
NS	Packaging kit for G4513A Injector	G4513-60810	1

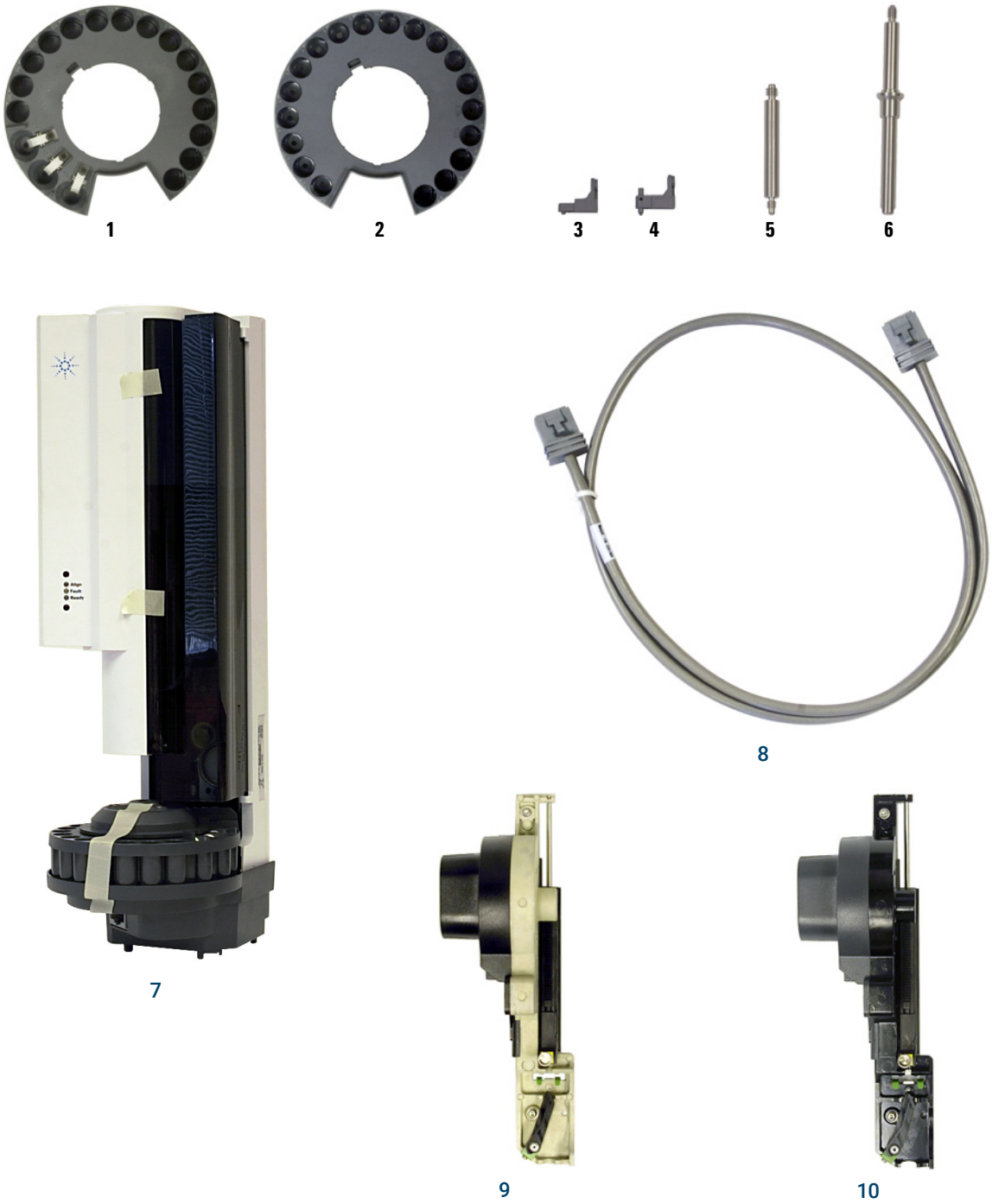

Figure 91. G4513A Injector replacement parts

G4514A Sample Tray

Table 28 and **Figure 92** list and show the replacement parts for the G4514A Sample Tray.

Table 28 G2614A Tray replacement parts

Item	Description	Part no.	Qty/Assy
1	Vial rack kit, contains 3 racks and 3 white labels	G4514-67505	1
2	L Key Torx T-20	8710-2430	1
3	5MM Hex L Key	G4514-80524	1
4	Tray bracket insulating washer	G4514-20529	1
5	M4 × 33.3 screw	0515-0437	1
6	M6 × 25 screw	0515-0192	3
7	Gripper finger caps	G4514-60710	16
8	M4 × 0.7 screw	1390-1024	4
9	Calibration vial	G4514-40588	1
10	Mounting bracket	G4514- 63000	1
11	Bar code reader/mixer/heater	G4515-64000	1
12	ALS main cable assembly	G4514-60610	1
13	Vial rack label kit	G4525-60701	3
NS	Heating and cooling plate	G4522A	1
NS	Vial rack set of 3, with 12 label tags (4 colors)	G4525A	1
NS	Packaging kit for G4514A Tray	G4514-60810	1

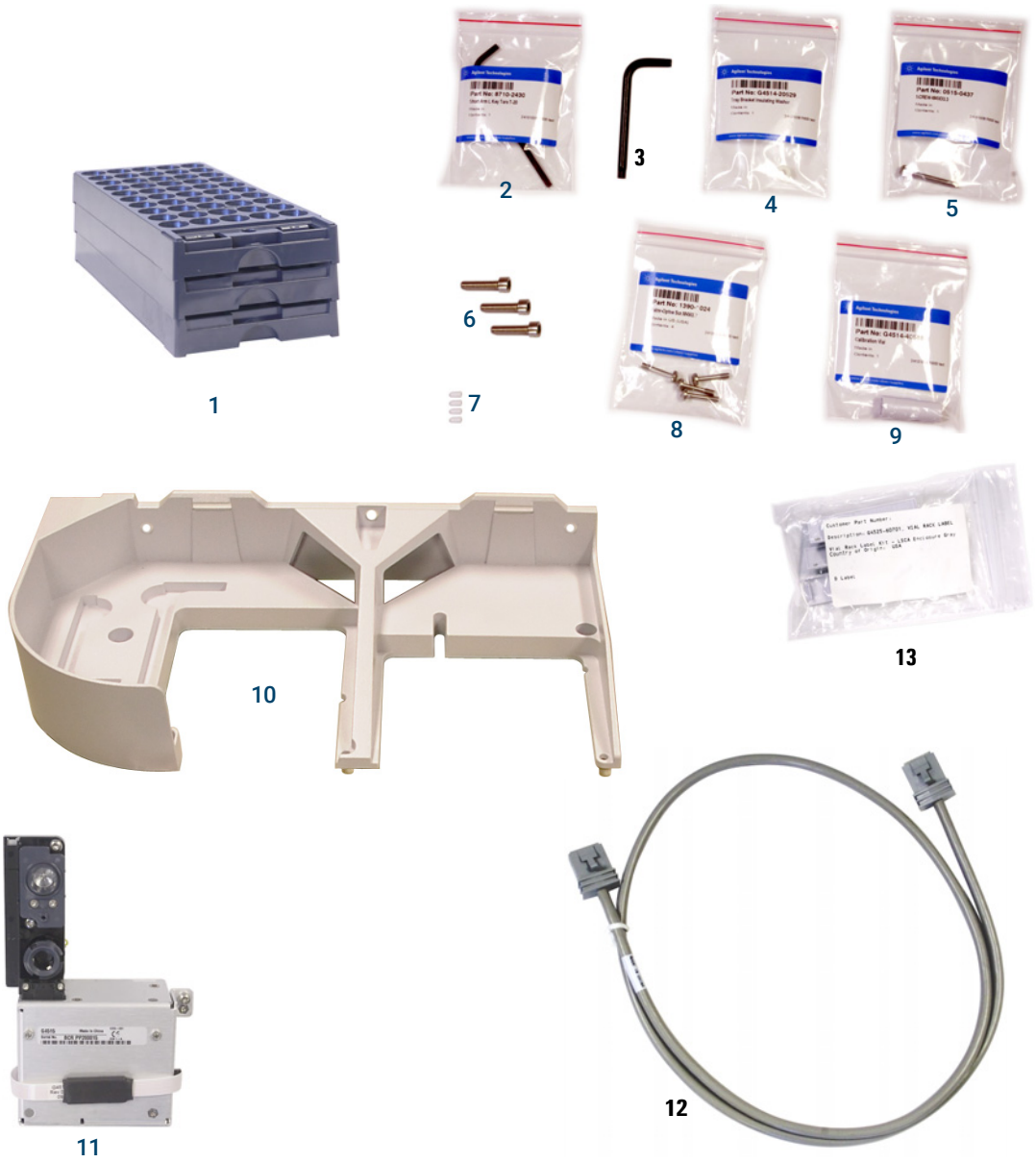

Figure 92. G4514A Sample Tray replacement parts

G4517A ALS Controller (6890A GC Only)

Table 29 and **Figure 93** list and show the replacement parts for the G4517A ALS Controller (for 6890A GCs only).

WARNING

Replacement of internal fuses and the battery can expose the servicing person to hazardous voltages and also exposes the controller to damage. Replacement is not covered in this manual. Refer servicing to qualified, Agilent-trained personnel.

Table 29 G4517A ALS Controller replacement parts

Item	Description	Part No.	Qty/Assy
1	G4517A Controller (new)	G4517-64000	
2	Fuse, 2 A 250 VAC		
NS	Fuse, power supply PCA		
NS	Fuse, ALS controller PCA		
NS	Battery, 3 V .5 A, Lithium ion		

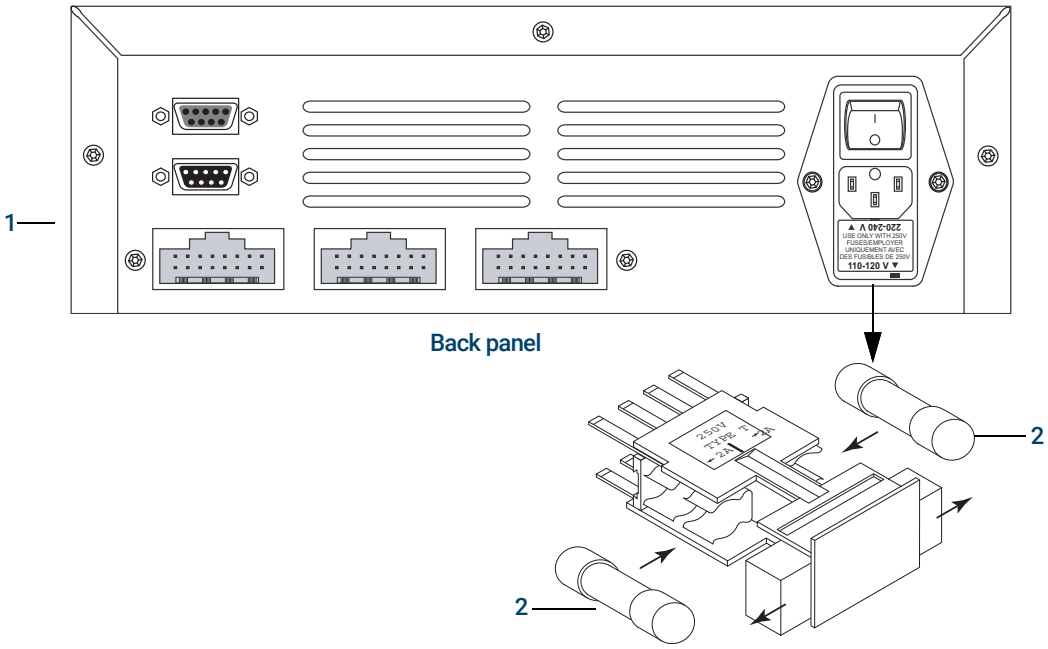

Figure 93. Replacement parts for the G4517A ALS Controller

G4516A ALS Interface Board (6890 Plus GC Only)

Table 30 G4516A ALS Interface Board replacement parts

Item	Description	Part no.	Qty/Assy
NS	ALS Interface Board controller	G4516-64000	1

www.agilent.com

© Agilent Technologies, Inc. 2023

Seventh edition, January 2023

G4513-90010

Agilent